SET-UP SHEET

XRAY XB8'24 SET-UP VER.01 ©XRAY

XRAY XB8'24 PIVOT BALL

RACE	European Championship
TRACK	Ongaroring
NAME	Hampus Berg
DATE	2024-07-27

TEMPERATURE AIR	TEMPERATURE TRACK		
35			
LAPS	FINAL POSITION	BEST LAPTIME	RACE LENGTH
		/sec	/min

TRACKS

SIZE	☐ OPEN	☒ MEDIUM	☐ TIGHT
TRACTION	☐ LOW	☒ MEDIUM	☐ HIGH
SURFACE	☒ SMOOTH	☐ MEDIUM	☐ BUMPY
TYPE	☒ HARD PACKED ☒ BLUE GROVE	☐ SOFT DIRT ☐ ASTRO TURF	☒ CLAY ☐ GRASS
CONDITION	☒ DRY	☐ DUSTY ☐ WET	☐ MUD

DIFFERENTIAL

	FRONT	CENTER	REAR	
CASE MATERIAL	G	G	G	CASE MATERIAL
OIL	20	60	8	OIL
CROWN GEAR	46/13		46/13	CROWN GEAR

GEARING

CLUTCH SHOE	3 ☐ ☒ 4	4x Medium
SPRINGS		4x Medium
CLUTCH BELL	14 /T	SPUR GEAR 48 /T

SHOCKS

FRONT		REAR
3-1	TYPE	3-1
4	SPRINGS	4
O-ring	MEMBRANE	O-ring
600 /cSt	OIL	700 /cSt

STANDARD PISTONS

☐ 6 HOLES	☐ 1.1 mm	☐ 6 HOLES		
☒ 8 HOLES	☒ 1.2 mm	☐ 8 HOLES		
☐ 10 HOLES	☐ 1.3 mm	☒ 10 HOLES		
	☐ 1.4 mm	☐		
	OTHER			

VALVE PISTONS

5+2 HOLES	1.5 mm	5+2 HOLES
6+2 HOLES	1.3 mm	6+2 HOLES
	1.4 mm	
8+2 HOLES	1.2 mm	8+2 HOLES
	1.3 mm	

ANTI-ROLL BAR

FRONT	THICKNESS	REAR
2,2 /mm		2.6 /mm

TIRES

FRONT		REAR
Matrix	BRAND	Blackhole
Clay SS	COMPOUND	Clay SS
Red	INSERTS	Std
Matrix	WHEELS	Hard

ENGINE

TYPE	FX k303
MUFFLER	FX 2169
MANIFOLD	FX Medium
PLUG	FX X3
FUEL	Energy 16%

BODY

EAZY ☐ EAZY LIGHT ☒ OTHER

TOTAL WEIGHT
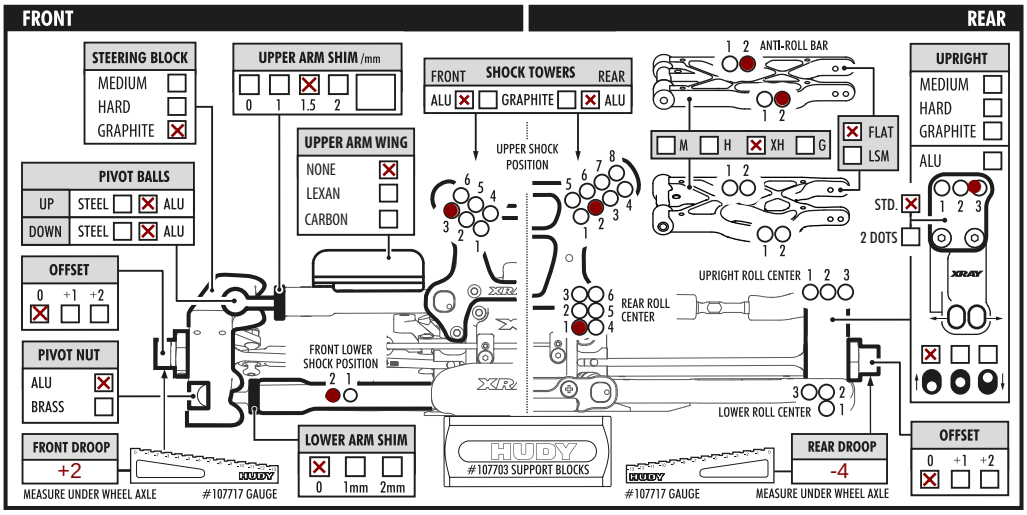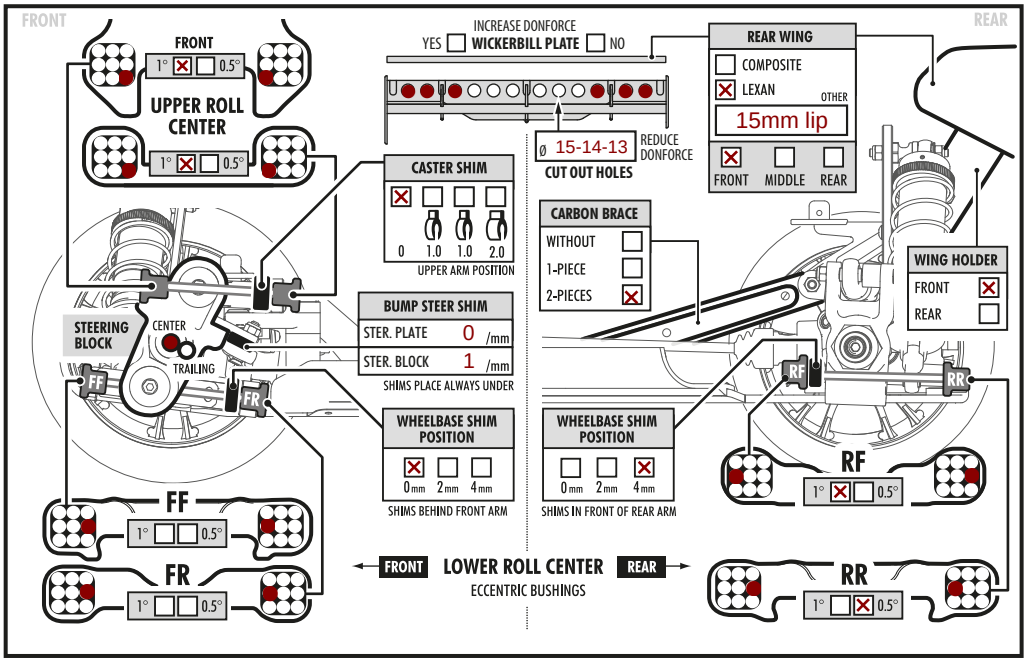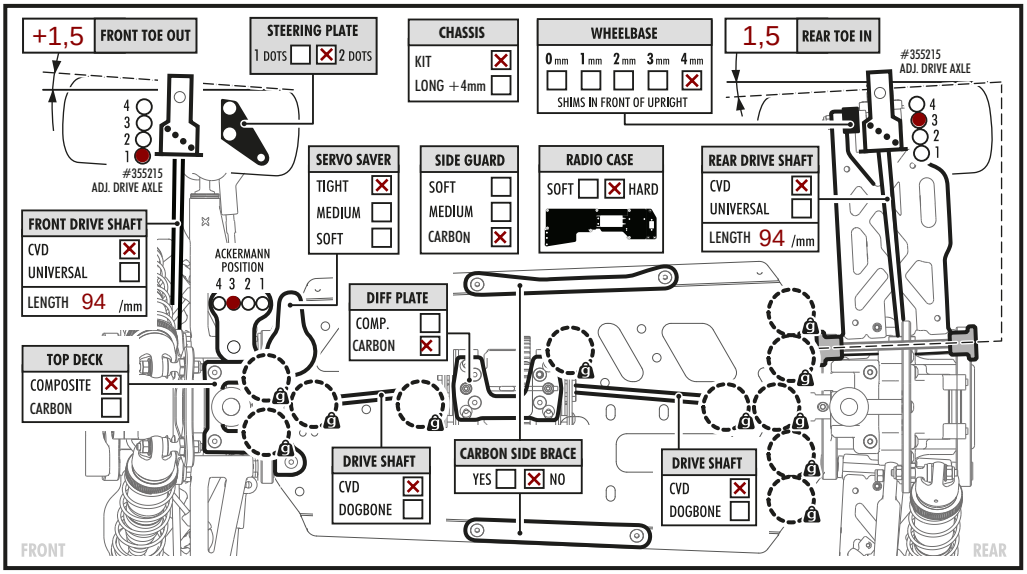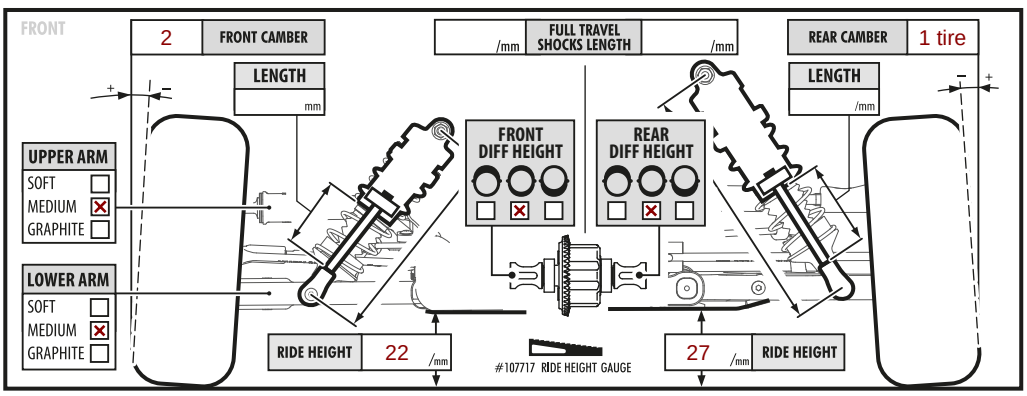
/g