SET-UP SHEET

XRAY XB8'24 SET-UP VER.01 ©XRAY

XRAY XB8'24 PIVOT BALL

RACE	1/8 Off-Road Fuel Nationals
TRACK	HRCR
NAME	Garrett Martin
DATE	6/23/2024

TEMPERATURE AIR	TEMPERATURE TRACK	LAPS	FINAL POSITION	BEST LAPTIME	RACE LENGTH
75	75			34.5 /sec	/min

TRACKS

SIZE	☐ OPEN	☒ MEDIUM	☐ TIGHT
TRACTION	☐ LOW	☐ MEDIUM	☒ HIGH
SURFACE	☐ SMOOTH	☒ MEDIUM	☐ BUMPY
TYPE	☒ HARD PACKED	☐ SOFT DIRT	☐ CLAY
	☐ BLUE GROVE	☐ ASTRO TURF	☐ GRASS
CONDITION	☐ DRY	☒ DUSTY	☐ WET ☐ MUD

DIFFERENTIAL

	FRONT	CENTER	REAR	
CASE MATERIAL	graphite	graphite	graphite	CASE MATERIAL
OIL	15000	20000	7000	OIL
CROWN GEAR	13/46		13/46	CROWN GEAR

GEARING

CLUTCH SHOE	3 ☐ ☒ 4 — 3 alu 1 carbon
SPRINGS	4 med
CLUTCH BELL	13 /T
SPUR GEAR	48 /T

SHOCKS

FRONT		REAR
emulsion	TYPE	emulsion
3 dot	SPRINGS	3 dot
o-ring	MEMBRANE	o-ring
550 /cSt	OIL	500 /cSt

STANDARD PISTONS

☐ 6 HOLES	☐	1.1 mm	☐	6 HOLES ☐	
☐ 8 HOLES	☐	1.2 mm	☐	8 HOLES ☐	
☐ 10 HOLES	☐	1.3 mm	☐	10 HOLES ☐	
● 7x1.3	☐	1.4 mm	☐	OTHER 7x1.4 ●	

VALVE PISTONS

5+2 HOLES	☐	1.5 mm	☐	5+2 HOLES	
6+2 HOLES	☐	1.3 mm	☐	6+2 HOLES	
	☐	1.4 mm	☐		
8+2 HOLES	☐	1.2 mm	☐	8+2 HOLES	
	☐	1.3 mm	☐		

ANTI-ROLL BAR

FRONT		REAR
2.4 /mm	THICKNESS	2.6 /mm

TIRES

FRONT		REAR
TZO 202	BRAND	TZO 202
Medium	COMPOUND	Medium
TZO	INSERTS	TZO
TZO	WHEELS	TZO

ENGINE

TYPE	FX K303
MUFFLER	FX 2169
MANIFOLD	FX
PLUG	X3
FUEL	30% Lutz

BODY

OTHER

EAZY ☐ EAZY LIGHT ☒

TOTAL WEIGHT
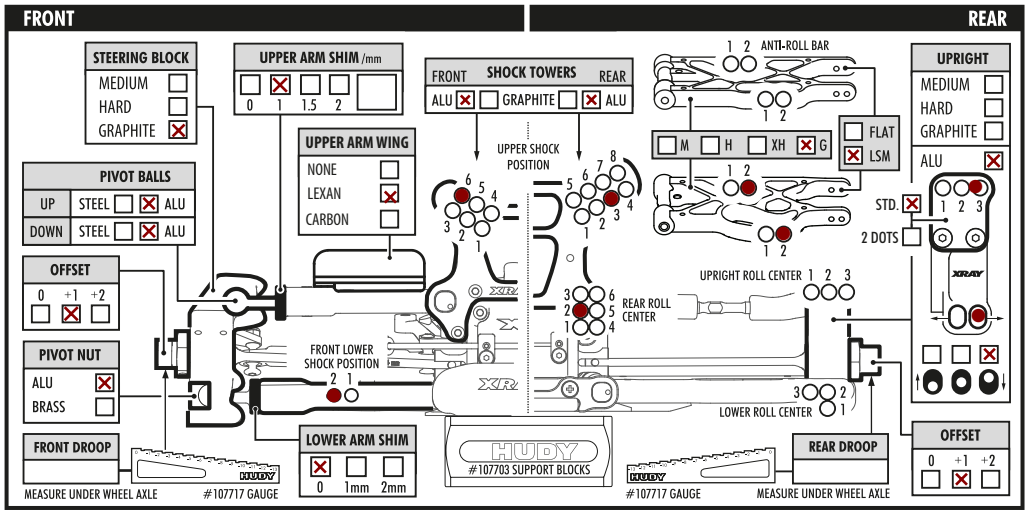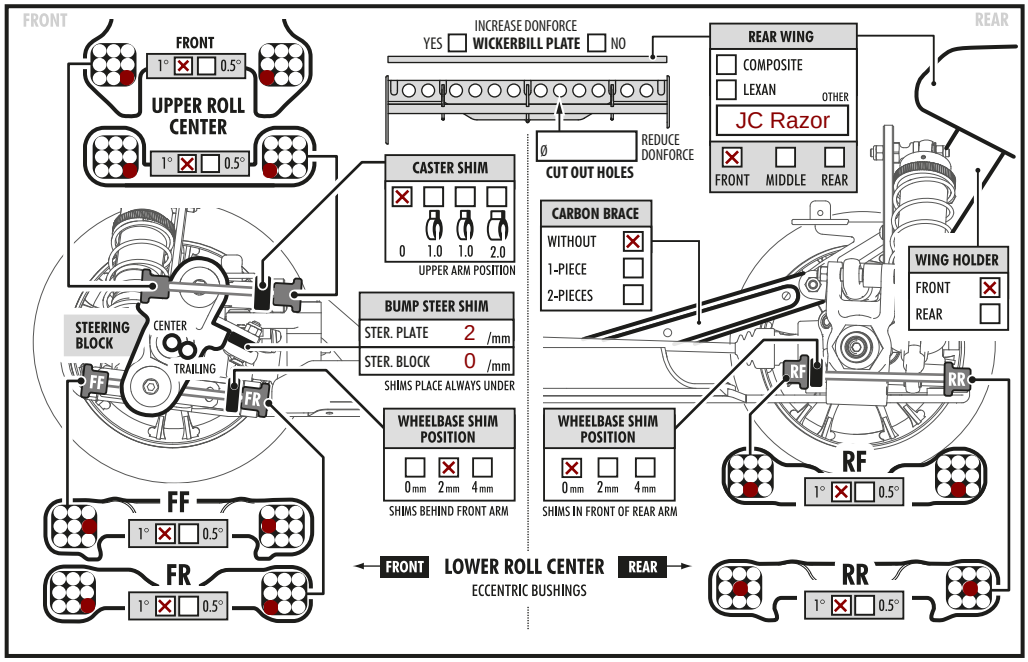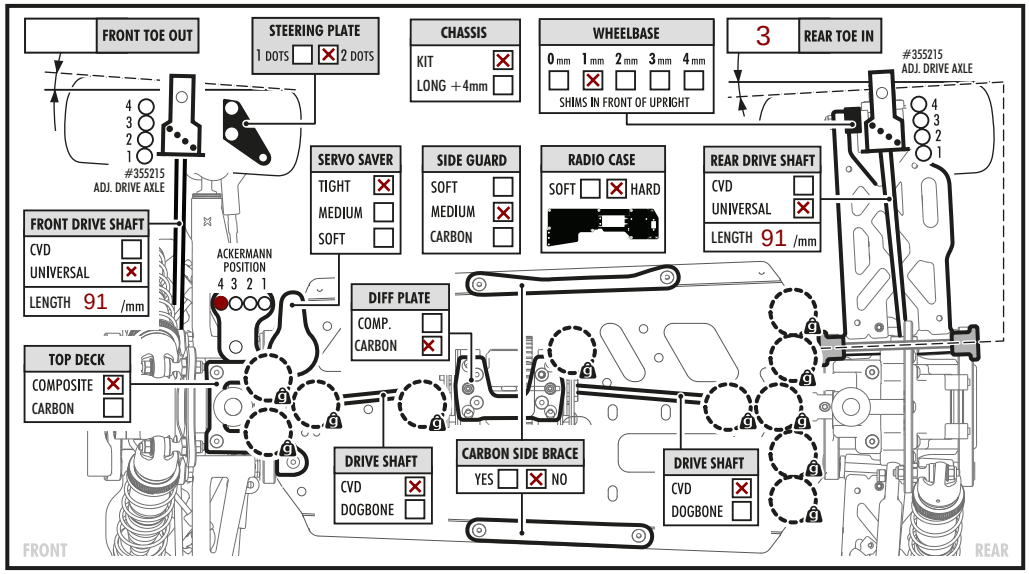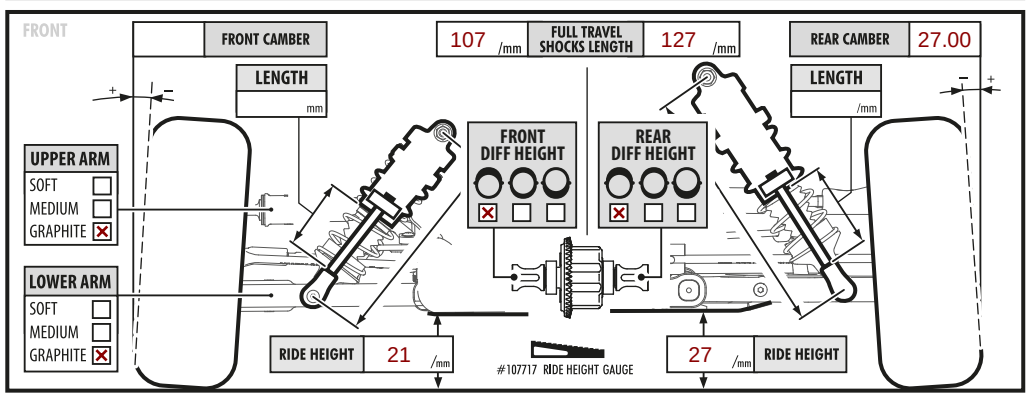
/g