SET-UP SHEET

XRAY XB8'24 SET-UP VER.01 ©XRAY

XRAY XB8'24 PIVOT BALL

RACE	RC Pro Series
TRACK	Indy RC World
NAME	Garrett Martin
DATE	7/21/2024

TEMPERATURE AIR	TEMPERATURE TRACK	LAPS	FINAL POSITION	BEST LAPTIME	RACE LENGTH
85	75			/sec	/min

TRACKS

SIZE	☐ OPEN	☐ MEDIUM	☒ TIGHT
TRACTION	☐ LOW	☐ MEDIUM	☒ HIGH
SURFACE	☒ SMOOTH	☐ MEDIUM	☐ BUMPY
TYPE	☒ HARD PACKED ☒ BLUE GROVE	☐ SOFT DIRT ☐ ASTRO TURF	☒ CLAY ☐ GRASS
CONDITION	☒ DRY	☐ DUSTY	☐ WET ☐ MUD

DIFFERENTIAL

	FRONT	CENTER	REAR	
CASE MATERIAL	graphite	graphite	graphite	CASE MATERIAL
OIL	15000	20000	7000	OIL
CROWN GEAR	13/46		13/46	CROWN GEAR

GEARING

CLUTCH SHOE	3 ☐ ☒ 4 — 3 alu 1 carbon
SPRINGS	4 med
CLUTCH BELL	13 /T
SPUR GEAR	47 /T

SHOCKS

FRONT		REAR
emulsion	TYPE	emulsion
Tekno Red	SPRINGS	Tekno Orange
o-ring	MEMBRANE	o-ring
550 /cSt	OIL	500 /cSt

STANDARD PISTONS

☐ 6 HOLES	1.1 mm	☐ 6 HOLES
☐ 8 HOLES	1.2 mm	☐ 8 HOLES
☐ 10 HOLES	1.3 mm	☐ 10 HOLES
	1.4 mm	
7x1.3	OTHER	7x1.4

VALVE PISTONS

5+2 HOLES	1.5 mm	5+2 HOLES
6+2 HOLES	1.3 mm	6+2 HOLES
	1.4 mm	
8+2 HOLES	1.2 mm	8+2 HOLES
	1.3 mm	

ANTI-ROLL BAR

FRONT	THICKNESS	REAR
2.4 /mm		2.6 /mm

TIRES

FRONT		REAR
TZO 101	BRAND	TZO 101
Medium	COMPOUND	Medium
TZO	INSERTS	TZO
TZO	WHEELS	TZO

ENGINE

TYPE	FX K303
MUFFLER	FX 2169
MANIFOLD	FX
PLUG	X3
FUEL	30%

BODY

EAZY ☐ EAZY LIGHT ☒ OTHER

TOTAL WEIGHT
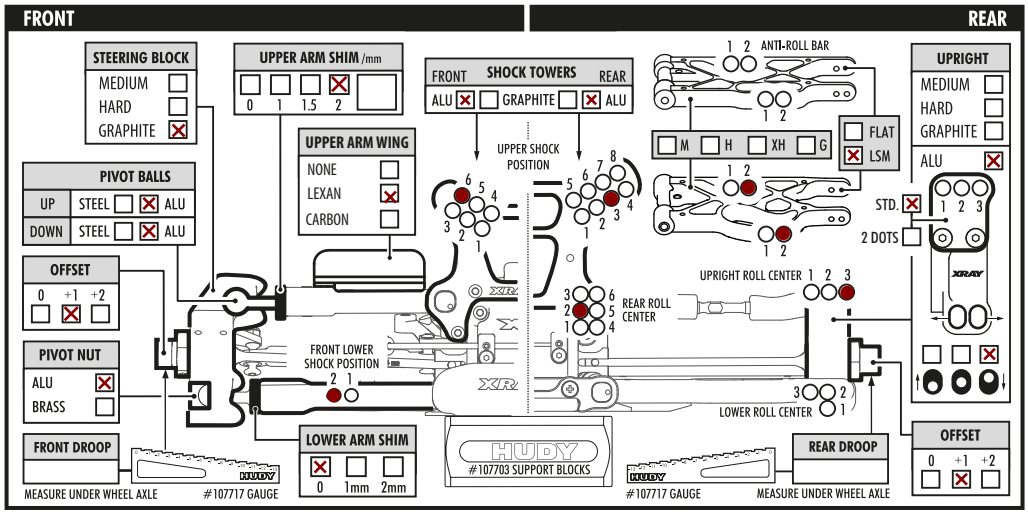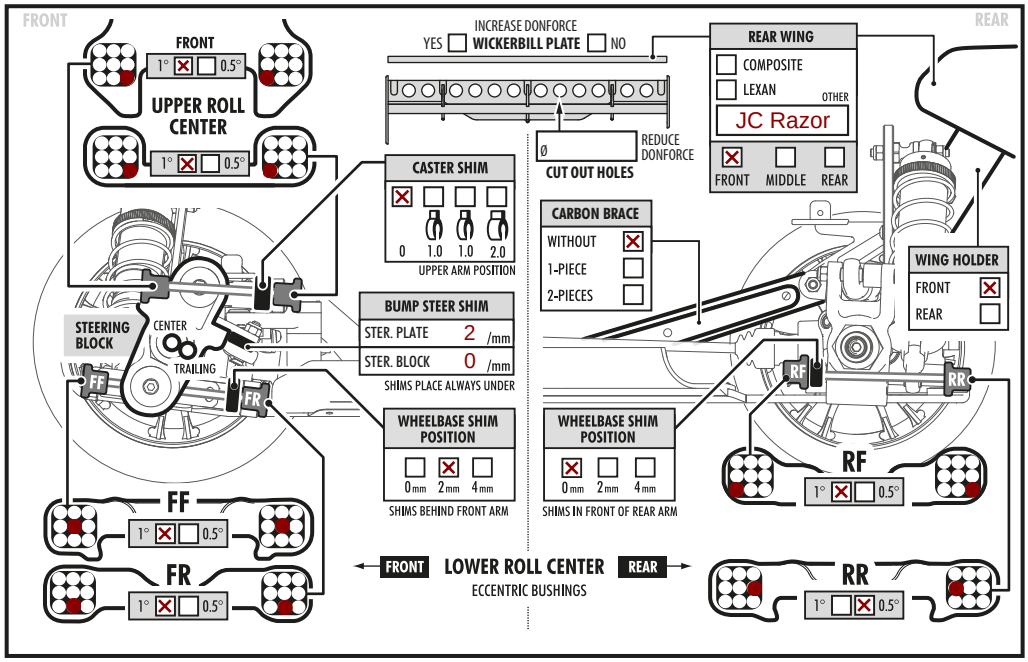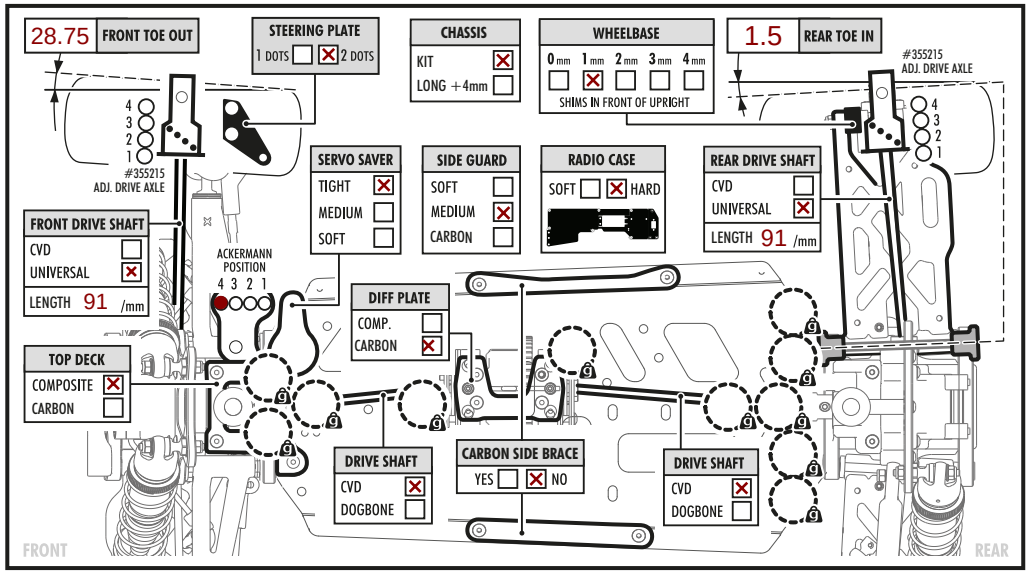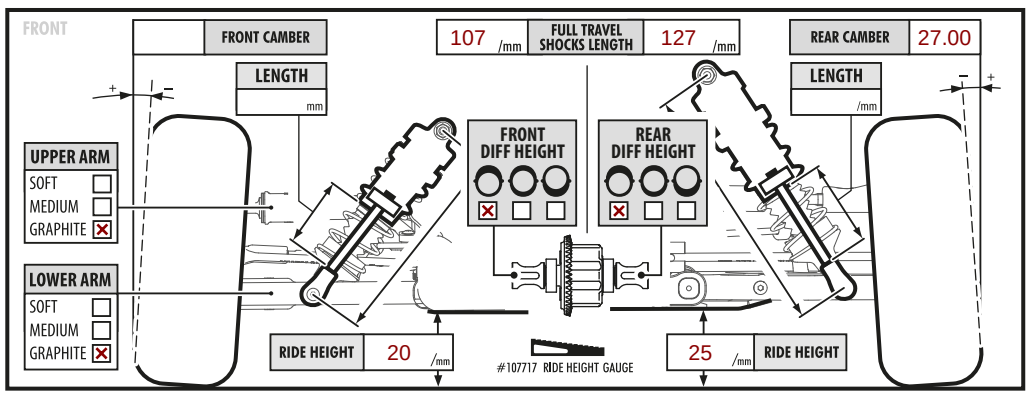
/g