SET-UP SHEET

XRAY XB8'23 SET-UP VER.01 ©XRAY

XRAY XB8'23 PIVOT BALL

RACE	NRCCC CLUB DAY		
TRACK	NELSON RADIO CONTROL CAR CLUB		
NAME	JAYDEN JAMIESON	DATE	25/02/2024

TEMPERATURE AIR	TEMPERATURE TRACK		
24C			
LAPS	FINAL POSITION	BEST LAPTIME	RACE LENGTH
		/sec	/min

TRACKS

SIZE	☐ OPEN	☒ MEDIUM	☐ TIGHT
TRACTION	☒ LOW	☐ MEDIUM	☐ HIGH
SURFACE	☐ SMOOTH	☒ MEDIUM	☐ BUMPY
TYPE	☒ HARD PACKED	☐ SOFT DIRT	☐ CLAY
	☐ BLUE GROVE	☐ ASTRO TURF	☐ GRASS
CONDITION	☐ DRY	☒ DUSTY	☐ WET ☐ MUD

DIFFERENTIAL

	FRONT	CENTER	REAR	
CASE MATERIAL	G	G	G	CASE MATERIAL
OIL	10	8	6	OIL
CROWN GEAR	KIT		KIT	CROWN GEAR

GEARING

CLUTCH SHOE	3 ☐ ☒ 4	X4 MEDIUM ALUMINIUM
SPRINGS	X2 SOFT, X2 MEDIUM	
CLUTCH BELL	14 /T	SPUR GEAR 48 /T

SHOCKS

FRONT		REAR
0 REBOUND	TYPE	0 REBOUND
4 DOT	SPRINGS	4 DOT
SOFT CLEAR	MEMBRANE	SOFT CLEAR
32.5TLR /cSt	OIL	35TLR /cSt

STANDARD PISTONS

☒ 6 HOLES	☐ 1.1 mm	☐	☐ 6 HOLES	☒
☐ 8 HOLES	☐ 1.2 mm	☐	☐ 8 HOLES	☐
☐ 10 HOLES	☐ 1.3 mm	☐	☐ 10 HOLES	☐
● MIP X2 CLEAR	☐ 1.4 mm	☐	OTHER 3X1.35,3X1.45	●

VALVE PISTONS

5+2 HOLES	☐ 1.5 mm	☐	☐ 5+2 HOLES
6+2 HOLES	☐ 1.3 mm	☐	☐ 6+2 HOLES
	☐ 1.4 mm	☐	
8+2 HOLES	☐ 1.2 mm	☐	☐ 8+2 HOLES
	☐ 1.3 mm	☐	

ANTI-ROLL BAR

FRONT	THICKNESS	REAR
2.0 /mm		2.0 /mm

TIRES

FRONT		REAR
TZO	BRAND	TZO
	COMPOUND	
	INSERTS	
	WHEELS	

ENGINE

TYPE	
MUFFLER	
MANIFOLD	
PLUG	
FUEL	

BODY

EAZY ☒ EAZY LIGHT ☐ OTHER

TOTAL WEIGHT
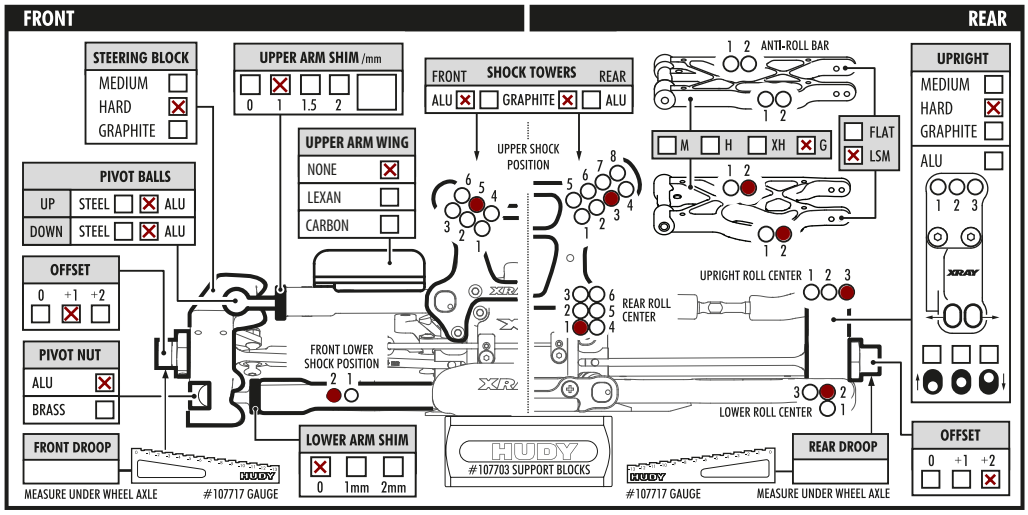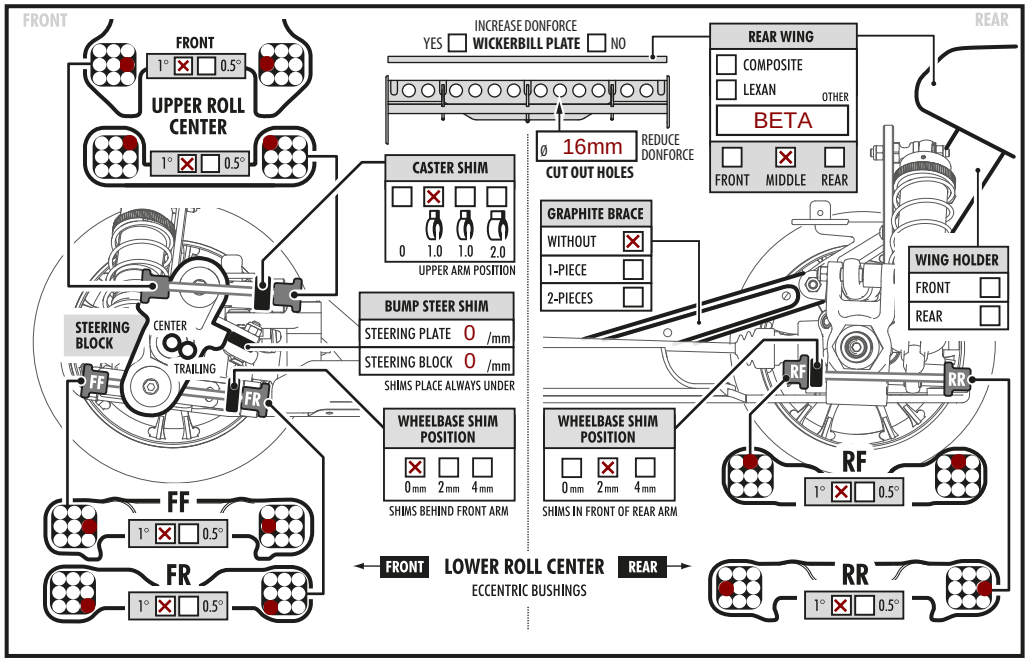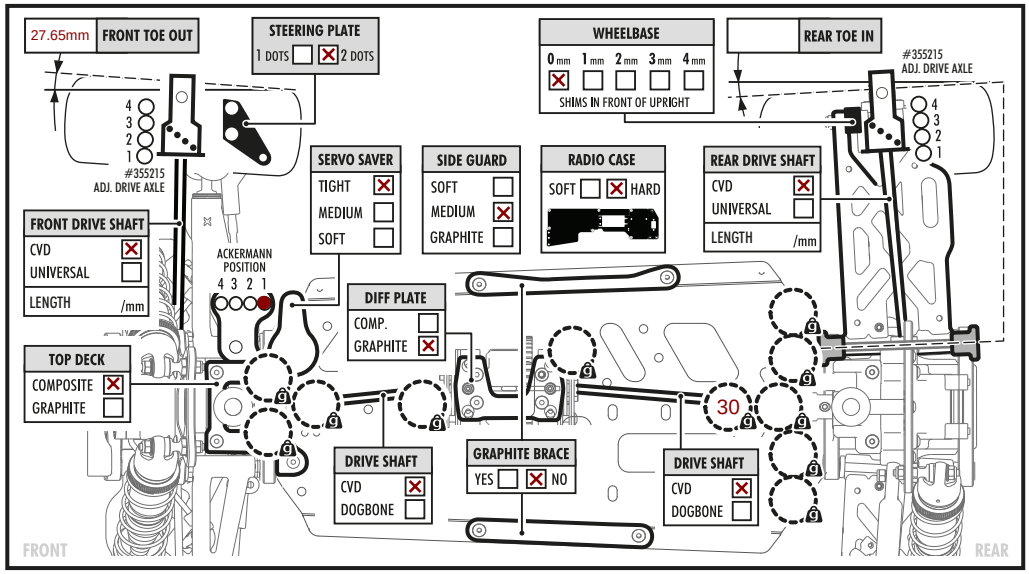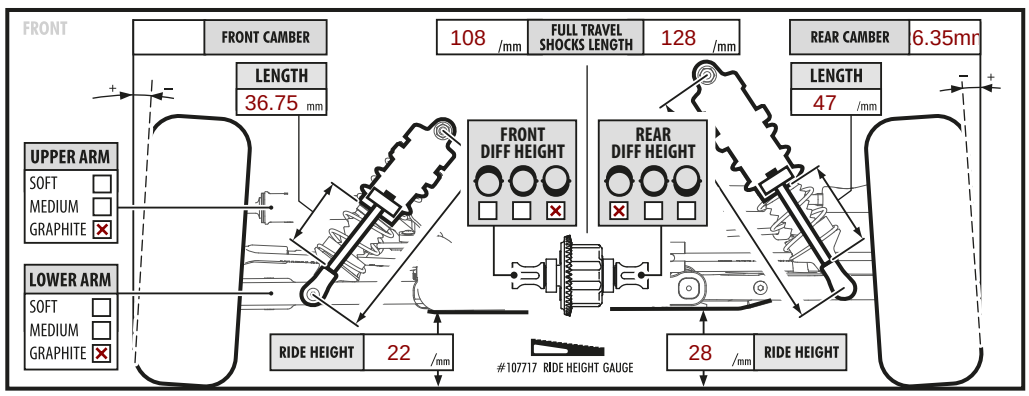
/g