SET-UP SHEET

XRAY XB8'23 SET-UP VER.01 ©XRAY

XRAY XB8'23 PIVOT BALL

RACE	Montpellier GP		
TRACK	Montpellier, France		
NAME	David Ronnefalk	DATE	11/2/2024

TEMPERATURE AIR	TEMPERATURE TRACK		
15°C			
LAPS	**FINAL POSITION**	**BEST LAPTIME**	**RACE LENGTH**
		/sec	/min

TRACKS

SIZE	☐ OPEN	☒ MEDIUM	☐ TIGHT
TRACTION	☐ LOW	☒ MEDIUM	☐ HIGH
SURFACE	☒ SMOOTH	☐ MEDIUM	☐ BUMPY
TYPE	☒ HARD PACKED	☐ SOFT DIRT	☒ CLAY
	☐ BLUE GROVE	☐ ASTRO TURF	☐ GRASS
CONDITION	☒ DRY	☐ DUSTY	☐ WET ☐ MUD

DIFFERENTIAL

	FRONT	CENTER	REAR	
CASE MATERIAL	G	G	G	CASE MATERIAL
OIL	7k	15k	4k	OIL
CROWN GEAR	46/13		46/13	CROWN GEAR

GEARING

CLUTCH SHOE	3 ☐ ☒ 4 — 4 Soft
SPRINGS	4 Medium
CLUTCH BELL	14 /T
SPUR GEAR	48 /T

SHOCKS

FRONT		REAR
Emulsion	TYPE	Emulsion
4 Dot	SPRINGS	3 Dot
Red Cut	MEMBRANE	Red Cut
37.5wt / 450 /cSt	OIL	35wt / 400 /cSt

STANDARD PISTONS

☒ 6 HOLES	1.1 mm ☐	☐ 6 HOLES
☐ 8 HOLES	1.2 mm ☐	☐ 8 HOLES
☒ 10 HOLES	1.3 mm ☐	☐ 10 HOLES
☐	1.4 mm ☒	☐
OTHER		OTHER

VALVE PISTONS

5+2 HOLES	1.5 mm	5+2 HOLES
6+2 HOLES	1.3 mm	6+2 HOLES
	1.4 mm	
8+2 HOLES	1.2 mm	8+2 HOLES
	1.3 mm	

ANTI-ROLL BAR

FRONT		REAR
2.2 /mm	THICKNESS	2.6 /mm

TIRES

FRONT		REAR
OGO Cheste	BRAND	OGO Cheste
Purple	COMPOUND	Purple
OGO	INSERTS	OGO
OGO	WHEELS	OGO

ENGINE

TYPE	Corsatec CTN7
MUFFLER	CT2180
MANIFOLD	CT
PLUG	P4
FUEL	Energy Feuel EU16%

BODY

OTHER

EAZY ☐ EAZY LIGHT ☒

TOTAL WEIGHT
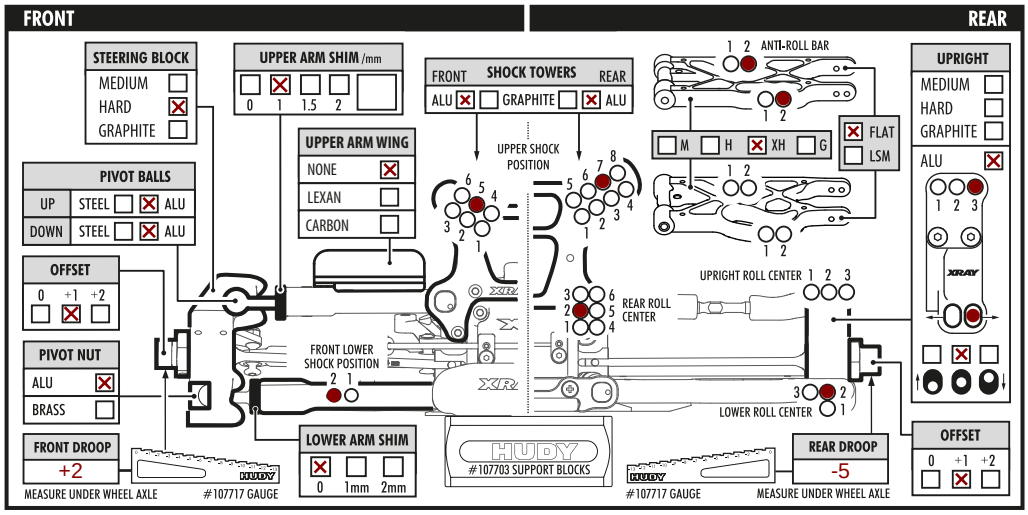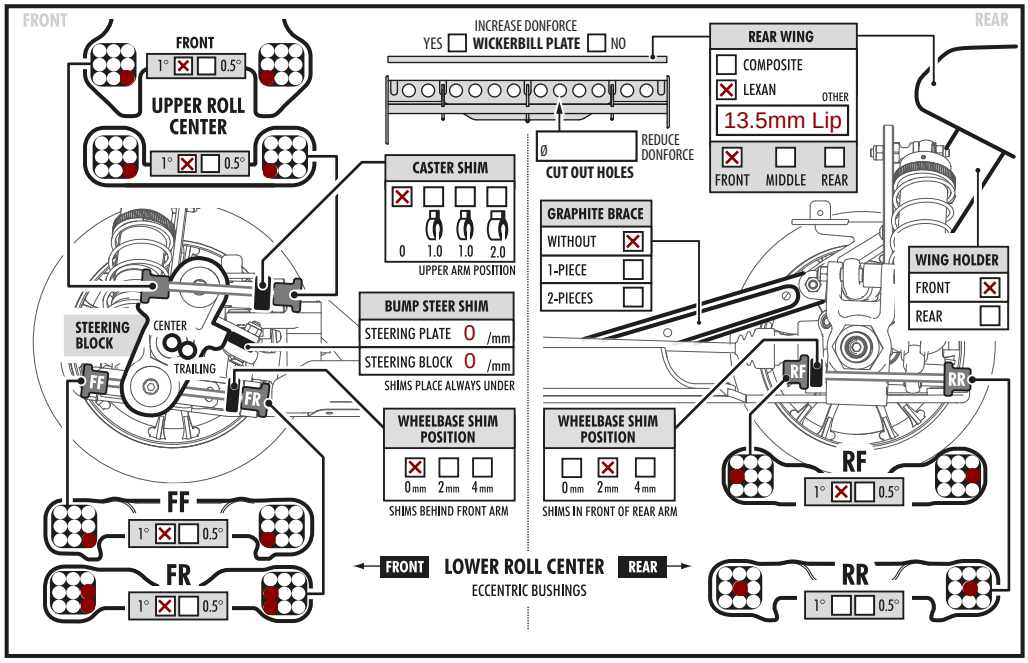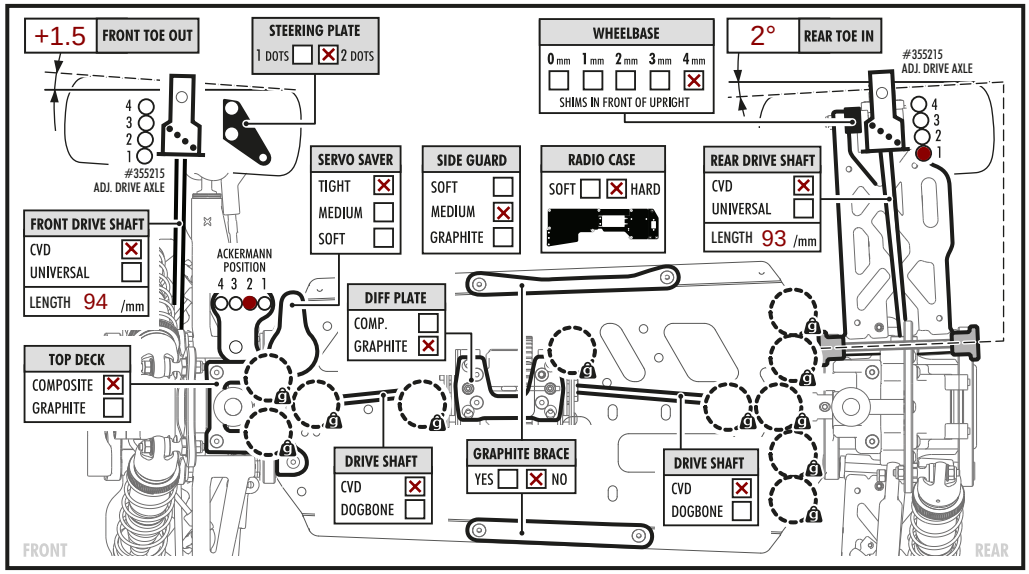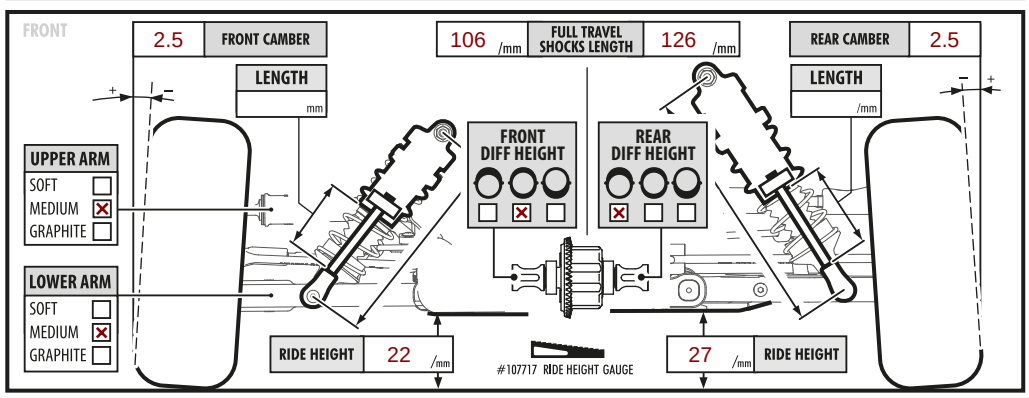
/g