SET-UP SHEET

SET-UP VER.01 ©XRAY

XRAY XB8E'23 PIVOT BALL

RACE	Championnat de France		
TRACK	Pierrefeu		
NAME	Bermudez remy	DATE	10-03-2024

TEMPERATURE AIR		TEMPERATURE TRACK	

LAPS	FINAL POSITION	BEST LAPTIME	RACE LENGTH
	4	/sec	/min

TRACKS

SIZE	☐ OPEN	☒ MEDIUM	☐ TIGHT
TRACTION	☐ LOW	☐ MEDIUM	☐ HIGH
SURFACE	☐ SMOOTH	☐ MEDIUM	☐ BUMPY
TYPE	☐ HARD PACKED	☐ SOFT DIRT	☐ CLAY
	☐ BLUE GROVE	☐ ASTRO TURF	☐ GRASS
CONDITION	☐ DRY	☐ DUSTY	☐ WET ☐ MUD

DIFFERENTIAL

	FRONT	CENTER	REAR	
CASE MATERIAL	Normal	Normal	Normal	CASE MATERIAL
OIL	8k	10k	4k	OIL
CROWN GEAR	13/46		13/46	CROWN GEAR

GEARING

MOTOR PINION		SPUR GEAR
	17 /T	47 /T

SHOCKS

FRONT		REAR
Normal	TYPE	Normal
4 dotes	SPRINGS	3 dotes
Émultion	MEMBRANE	Émultion
350 /cSt	OIL	300 /cSt
	PISTONS	
☒ 6 HOLES	1.1 mm	☐ 6 HOLES
☐ 8 HOLES	1.2 mm	☐ 8 HOLES
☒ 10 HOLES	1.3 mm	☐ 10 HOLES
☐	1.4 mm	☒
	OTHER	
	VALVE PISTONS	
5+2 HOLES	1.5 mm	5+2 HOLES
6+2 HOLES	1.3 mm	6+2 HOLES
	1.4 mm	
8+2 HOLES	1.2 mm	8+2 HOLES
	1.3 mm	

ANTI-ROLL BAR

FRONT	THICKNESS	REAR
2.2 /mm		2.4 /mm

TIRES

FRONT		REAR
White	BRAND	White
Amazonia	COMPOUND	Amazonia
	INSERTS	
	WHEELS	

ELECTRONICS

MOTOR	Corsatec 2100
SPEEDO	Corsatec
BATTERY TYPE	Shorty 6400

☐ STANDARD BATTERY ☒ SHORT BATTERY — FRONT

☐ STANDARD BATTERY ☐ SHORT BATTERY — REAR
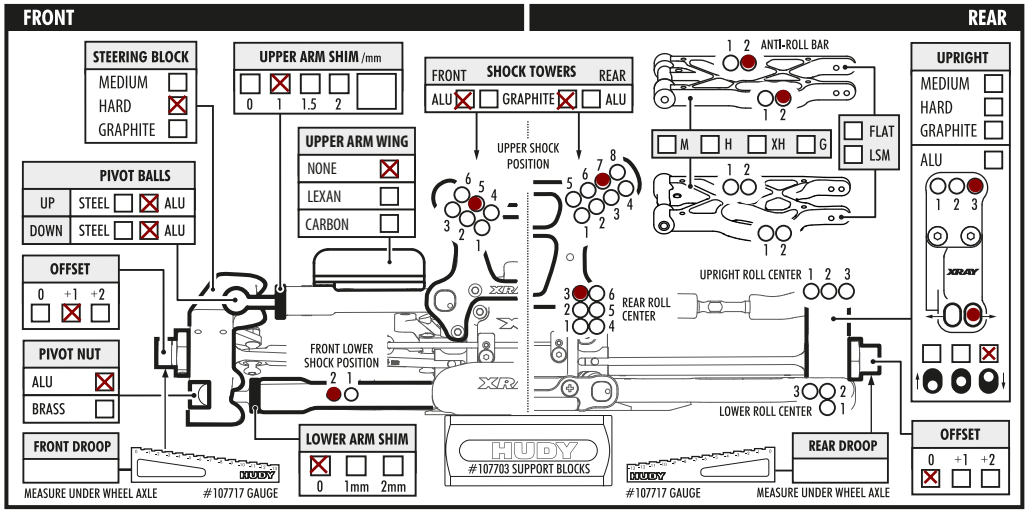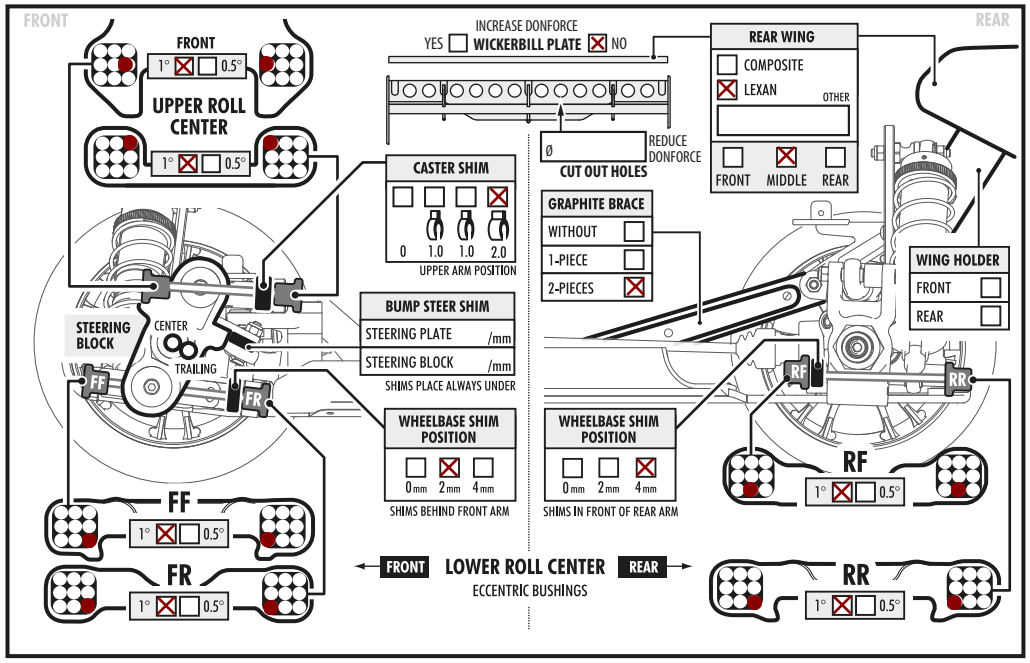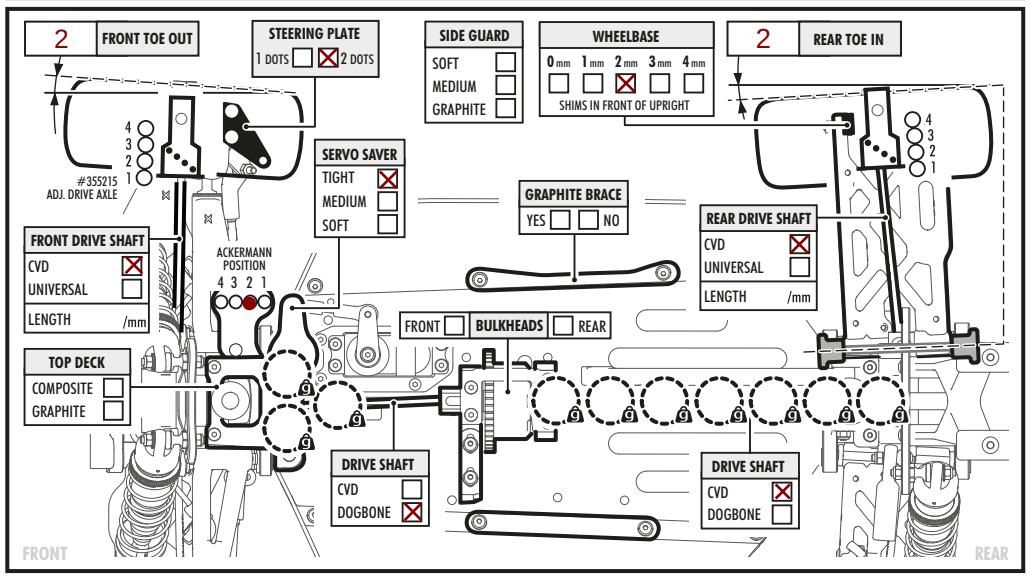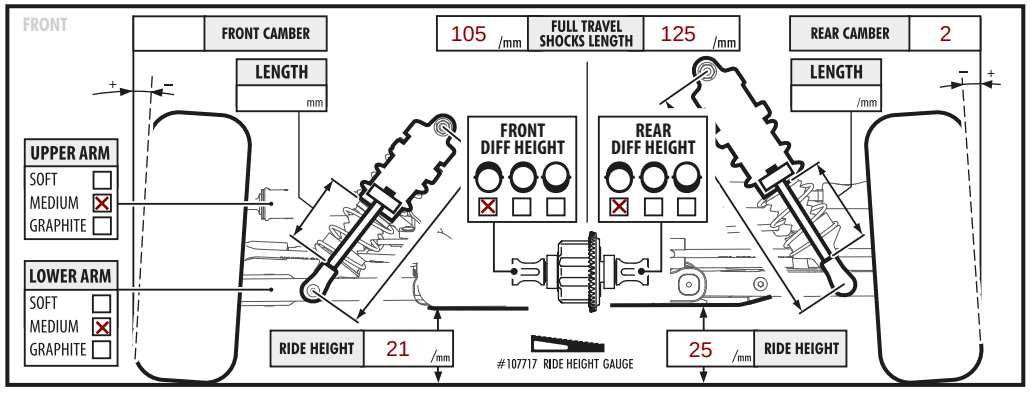
BODY	OTHER	TOTAL WEIGHT
☒ EAZY ☐ EAZY LIGHT		/g