SET-UP SHEET

XRAY XB8'20 PIVOT BALL

RACE	Hungarian Nationals R6
TRACK	Homokbödöge
NAME	Max Götzl
DATE	8.8.2020

TEMPERATURE AIR		TEMPERATURE TRACK	

LAPS	FINAL POSITION	BEST LAPTIME	RACE LENGTH
	1.	30.1 /sec	30 /min

TRACKS

SIZE	☐ OPEN	☒ MEDIUM	☐ TIGHT
TRACTION	☒ LOW	☐ MEDIUM	☐ HIGH
SURFACE	☒ SMOOTH	☐ MEDIUM	☐ BUMPY
TYPE	☐ HARD PACKED ☒ BLUE GROVE	☐ SOFT DIRT ☐ ASTRO TURF	☐ CLAY ☐ GRASS
CONDITION	☐ DRY	☒ DUSTY	☐ WET ☐ MUD

DIFFERENTIAL

	FRONT	CENTER	REAR	
CASE MATERIAL	G	G	G	CASE MATERIAL
OIL	7k	10k	4k	OIL
CROWN GEAR	46		46	CROWN GEAR

GEARING

CLUTCH BELL	13 /T	48 /T	SPUR GEAR
SHOE	2x Alu 1x G	3x H	SPRING

SHOCKS

FRONT		REAR
'18 caps	TYPE	'18 caps
3 dot	SPRINGS	3 dot
Soft	MEMBRANE	Soft
550 /cSt	OIL	600 /cSt

STANDARD PISTONS

☐ 6 HOLES	☐ 1.1 mm	☐	☐ 6 HOLES	
☒ 8 HOLES	☒ 1.2 mm	☐	☐ 8 HOLES	☒
☐ 10 HOLES	☐ 1.3 mm	☒	☐ 10 HOLES	☐
	☐ 1.4 mm	☐		
	OTHER			

VALVE PISTONS

5+2 HOLES	☐ 1.5 mm	☐	5+2 HOLES
6+2 HOLES	☐ 1.3 mm	☐	6+2 HOLES
	☐ 1.4 mm		
8+2 HOLES	☐ 1.2 mm	☐	8+2 HOLES
	☐ 1.3 mm	☐	

ANTI-ROLL BAR

FRONT	THICKNESS	REAR
2.2 /mm		2.4 /mm

TIRES

FRONT		REAR
Hotrace	BRAND	
Soft	COMPOUND	Sahara
Hotrace	INSERTS	
Hotrace	WHEELS	Black

ENGINE

TYPE	FX K301 EC
MUFFLER	FX 2131
MANIFOLD	FX S-M
PLUG	FX X3
FUEL	RT 25%

BODY / WEIGHT

HS	HS-LIGHT	OTHER	TOTAL
☐	☒		/g
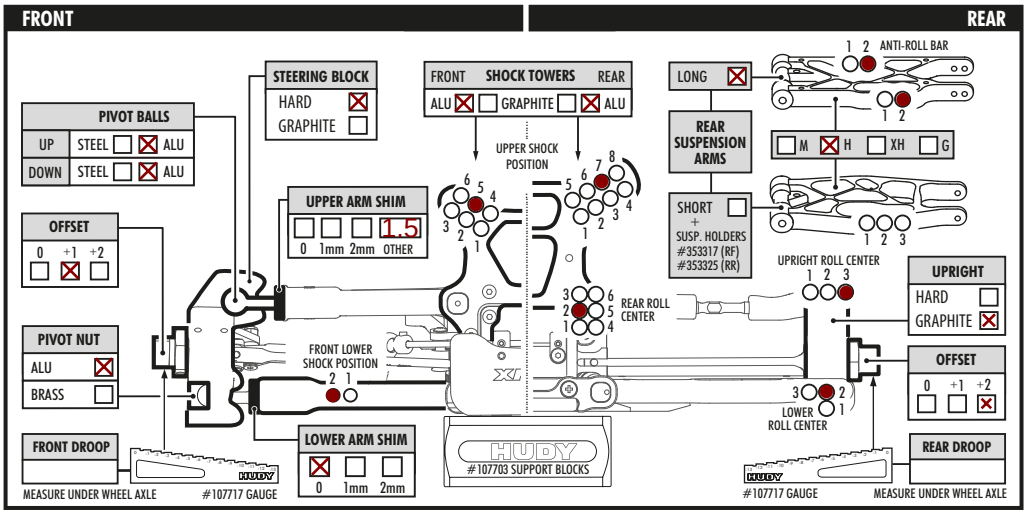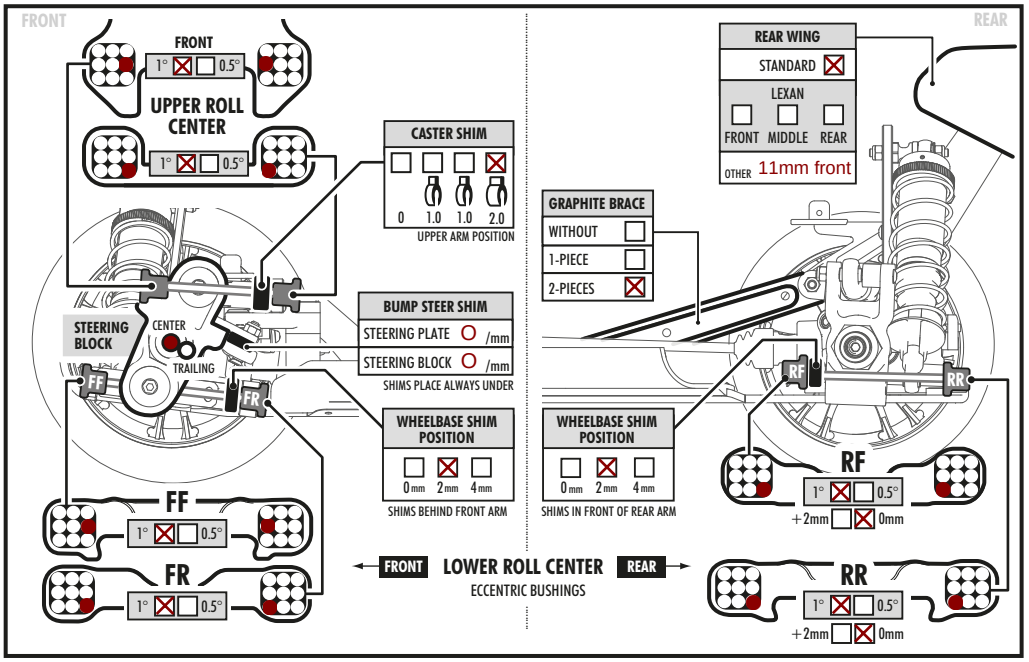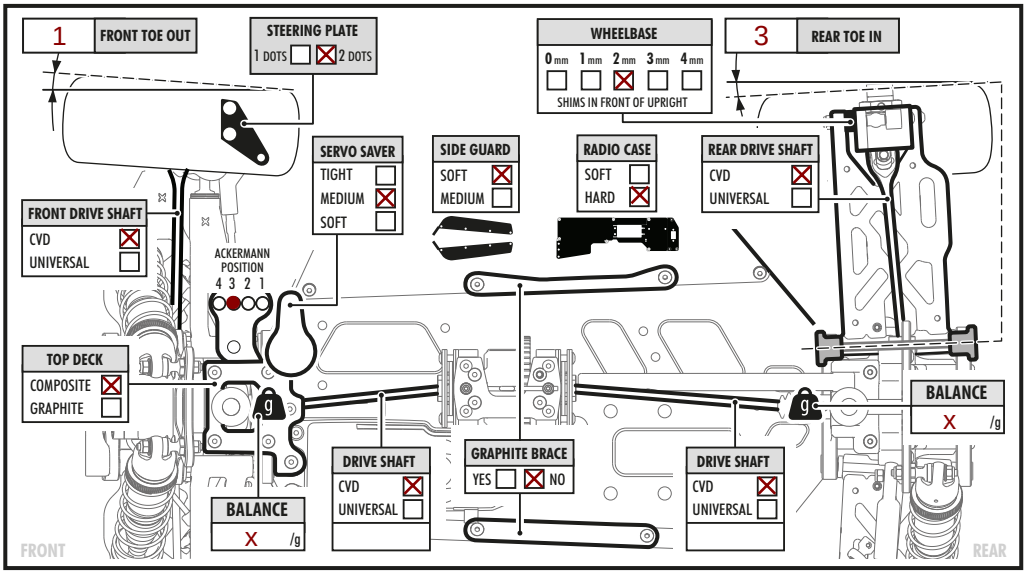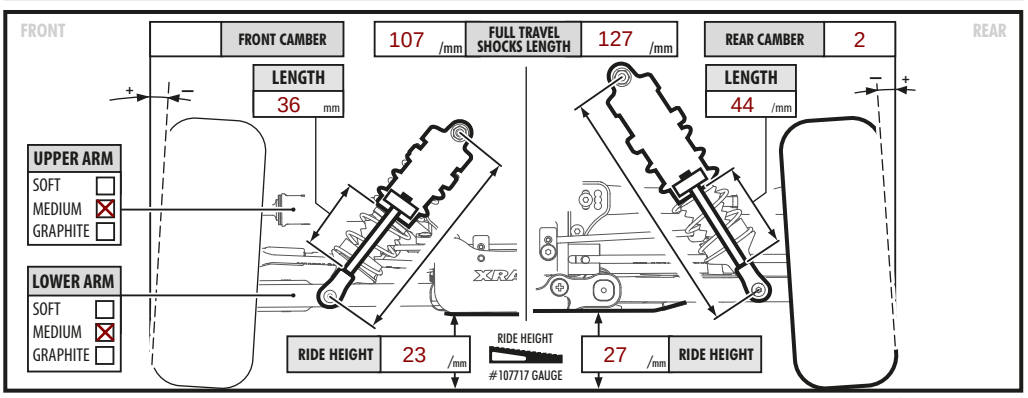
FRONT / REAR