SET-UP SHEET

XRAY XB8'24 SET-UP VER.01 ©XRAY

XRAY XB8'24 PIVOT BALL

RACE	Thornhill Club Race.		
TRACK	Thornhill Racing Circuit		
NAME	Ethan Lefebvre	DATE	8/31/24

TEMPERATURE AIR	TEMPERATURE TRACK		
95			
LAPS	**FINAL POSITION**	**BEST LAPTIME**	**RACE LENGTH**
		38.3 /sec	/min

TRACKS

SIZE	☐ OPEN	☒ MEDIUM	☐ TIGHT
TRACTION	☐ LOW	☒ MEDIUM	☐ HIGH
SURFACE	☐ SMOOTH	☒ MEDIUM	☐ BUMPY
TYPE	☒ HARD PACKED	☐ SOFT DIRT	☐ CLAY
	☒ BLUE GROVE	☐ ASTRO TURF	☐ GRASS
CONDITION	☒ DRY	☐ DUSTY	☐ WET ☐ MUD

DIFFERENTIAL

	FRONT	CENTER	REAR	
CASE MATERIAL	G	G	G	CASE MATERIAL
OIL	12	15	5	OIL
CROWN GEAR	14/16		14/46	CROWN GEAR

GEARING

CLUTCH SHOE	3 ☐ ☒ 4	Med
SPRINGS	4 Med	
CLUTCH BELL	13 /T	SPUR GEAR 48 /T

SHOCKS

FRONT		REAR
3N1	TYPE	3n1
4 dot	SPRINGS	4 dot
Soft	MEMBRANE	Clear
500 /cSt	OIL	400 /cSt

STANDARD PISTONS

☒	6 HOLES	☐ 1.1 mm ☐	☐	6 HOLES	☐ ☒
☐	8 HOLES	☐ 1.2 mm ☐	☐	8 HOLES	☐ ☐
☐	10 HOLES	☒ 1.3 mm ☒	☐	10 HOLES	☐ ☐
☐		☐ 1.4 mm ☐	OTHER	3@1.4	☐

VALVE PISTONS

5+2 HOLES	☐	1.5 mm ☐	☐	5+2 HOLES	
6+2 HOLES	☐	1.3 mm ☐	☐	6+2 HOLES	
	☐	1.4 mm ☐			
8+2 HOLES	☐	1.2 mm ☐	☐	8+2 HOLES	
	☐	1.3 mm ☐			

ANTI-ROLL BAR

FRONT		REAR
2.3 /mm	THICKNESS	2.5 /mm

TIRES

FRONT		REAR
Aka	BRAND	
Aka	COMPOUND	
Aka	INSERTS	
Aka	WHEELS	

ENGINE

TYPE	Fx k303
MUFFLER	2169
MANIFOLD	Med
PLUG	X3
FUEL	Rocket science 30

BODY

EAZY	EAZY LIGHT	OTHER
☐	☒	

TOTAL WEIGHT
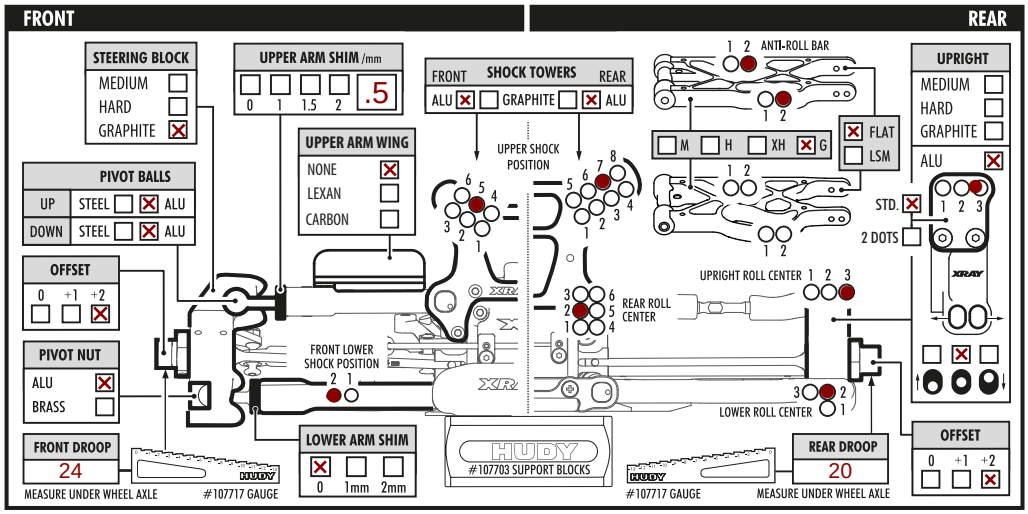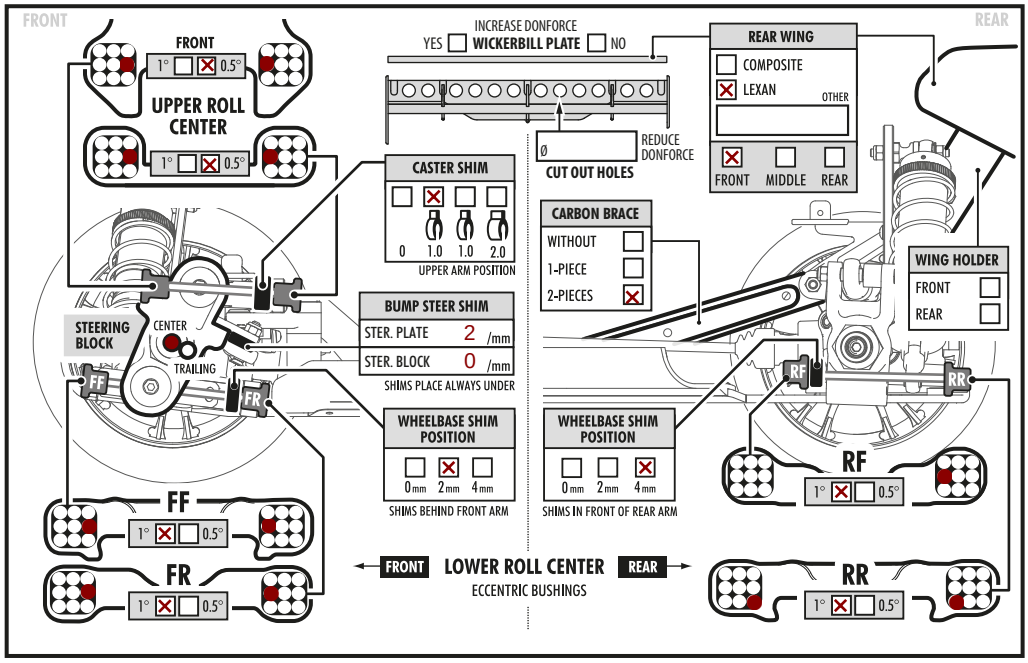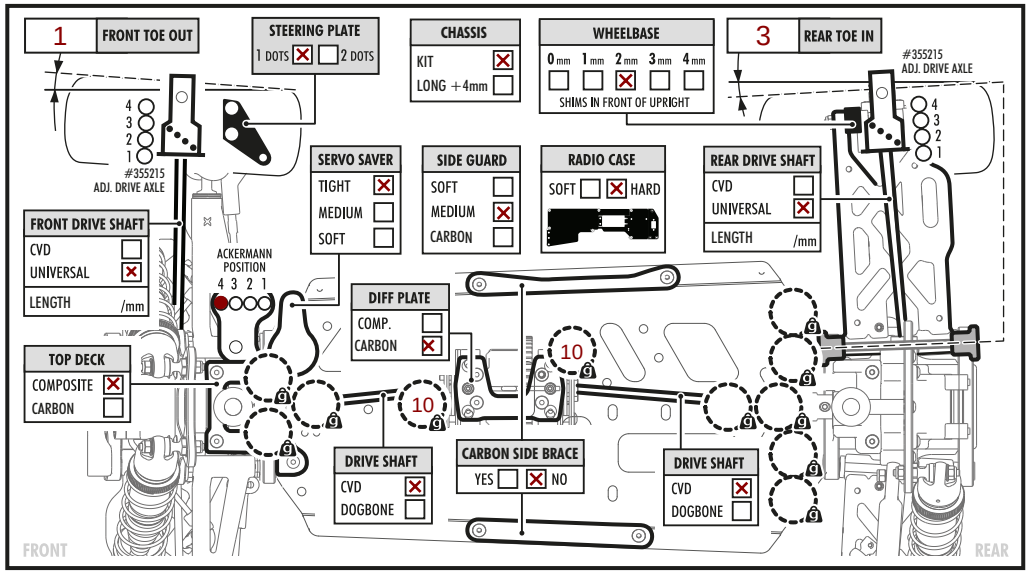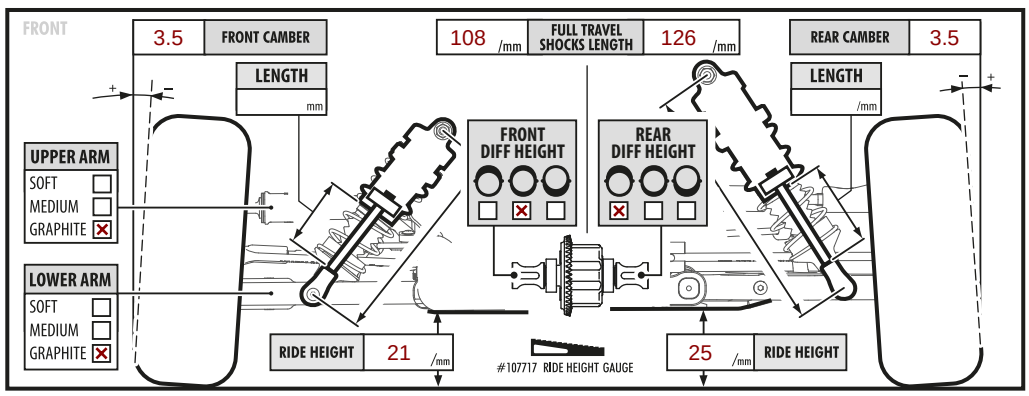
/g