SET-UP SHEET

XRAY XB8'24 SET-UP VER.01 ©XRAY

XRAY XB8'24 PIVOT BALL

RACE	Spokane Testing
TRACK	
NAME	DATE

TEMPERATURE AIR	TEMPERATURE TRACK	LAPS	FINAL POSITION	BEST LAPTIME	RACE LENGTH
60				/sec	/min

TRACKS

SIZE	OPEN	[X] MEDIUM	TIGHT
TRACTION	LOW	[X] MEDIUM	HIGH
SURFACE	[X] SMOOTH	MEDIUM	BUMPY
TYPE	HARD PACKED	SOFT DIRT	CLAY
	BLUE GROVE	ASTRO TURF	GRASS
CONDITION	DRY	[X] DUSTY	WET	MUD

DIFFERENTIAL

	FRONT	CENTER	REAR	
CASE MATERIAL				CASE MATERIAL
OIL	10	10	6	OIL
CROWN GEAR				CROWN GEAR

GEARING

CLUTCH SHOE	3 [ ] [X] 4
SPRINGS	
CLUTCH BELL	/T
SPUR GEAR	/T

SHOCKS

FRONT		REAR
Kit	TYPE	Kit
HB yellow	SPRINGS	HB Blue
O ring	MEMBRANE	O ring
400 /cSt	OIL	375 /cSt

STANDARD PISTONS

[ ] 6 HOLES	[ ] 1.1 mm	[ ] 1.2 mm	[ ] 1.3 mm	[ ] 1.4 mm	[ ] 6 HOLES
[ ] 8 HOLES					[ ] 8 HOLES
[ ] 10 HOLES					[ ] 10 HOLES
3x1.4 2x1.5				OTHER	3x1.5 2x1.6

VALVE PISTONS

5+2 HOLES	1.5 mm	1.3 mm	1.4 mm	1.2 mm	1.3 mm
6+2 HOLES					
8+2 HOLES					

ANTI-ROLL BAR

FRONT		REAR
2.2 /mm	THICKNESS	2.4 /mm

TIRES

FRONT		REAR
JC Green	BRAND	Falcon
	COMPOUND	
	INSERTS	
	WHEELS	

ENGINE

TYPE	
MUFFLER	
MANIFOLD	
PLUG	
FUEL	

BODY

EAZY [ ] EAZY LIGHT [ ] OTHER

TOTAL WEIGHT

/g
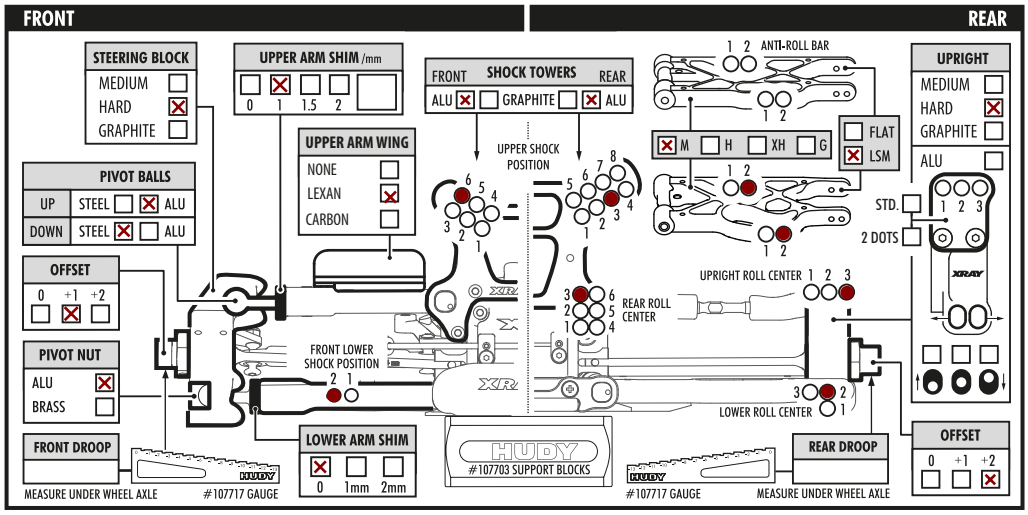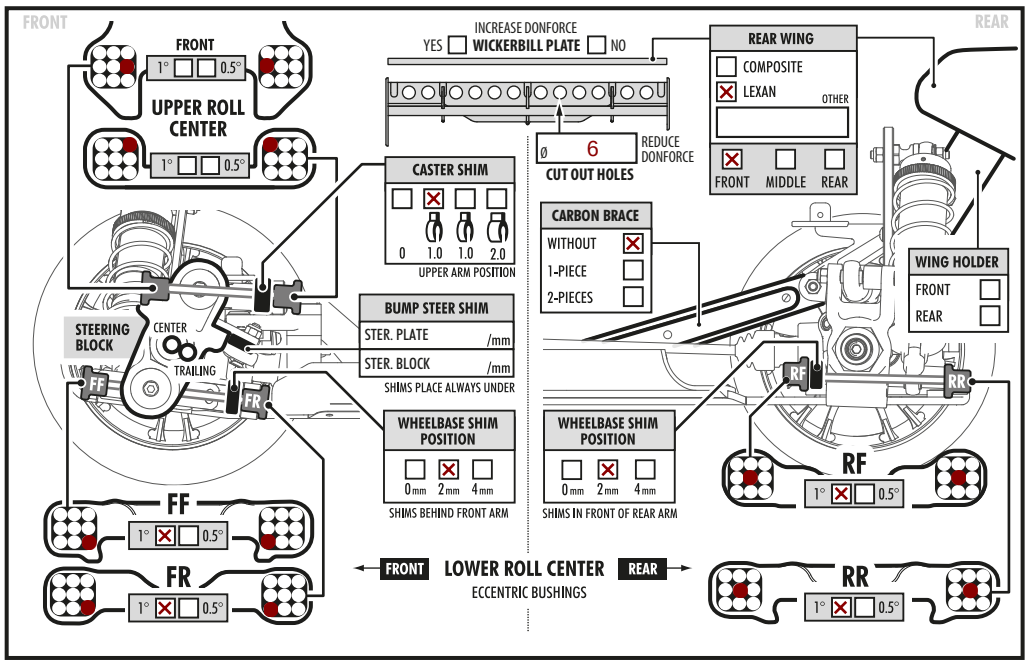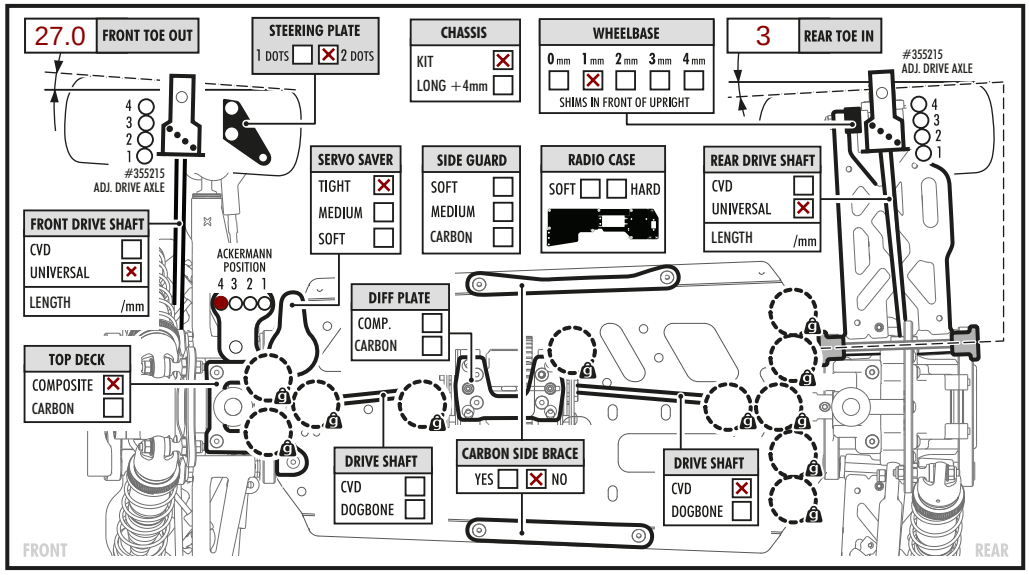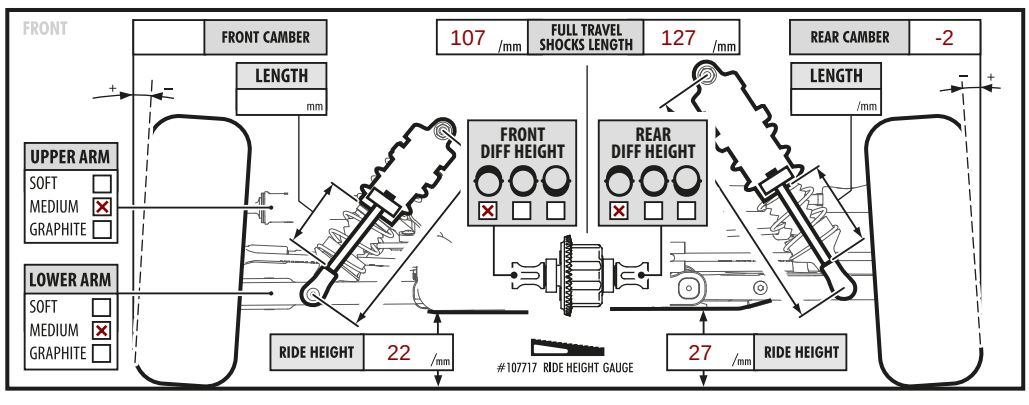
FRONT / REAR