SET-UP SHEET

SET-UP VER.01 ©XRAY

XRAY XB8E'24 PIVOT BALL

RACE	SOS GP 3		
TRACK	Bjaverskov		
NAME	Hampus Berg	DATE	2023-05-19

TEMPERATURE AIR	TEMPERATURE TRACK
25	

LAPS	FINAL POSITION	BEST LAPTIME	RACE LENGTH
	2	31,3 /sec	10 /min

TRACKS

SIZE	☐ OPEN	☒ MEDIUM	☐ TIGHT
TRACTION	☐ LOW	☒ MEDIUM	☐ HIGH
SURFACE	☐ SMOOTH	☒ MEDIUM	☐ BUMPY
TYPE	☒ HARD PACKED	☐ SOFT DIRT	☒ CLAY
	☐ BLUE GROVE	☐ ASTRO TURF	☐ GRASS
CONDITION	☐ DRY	☒ DUSTY	☐ WET ☐ MUD

DIFFERENTIAL

	FRONT	CENTER	REAR	
CASE MATERIAL	STD	STD	STD	CASE MATERIAL
OIL	10k	15k	4k	OIL
CROWN GEAR	46/13		46/13	CROWN GEAR

GEARING

MOTOR PINION		SPUR GEAR
46 /T	16 /T	

SHOCKS

FRONT		REAR
Elmulsion	TYPE	Elmulsion
4	SPRINGS	3
O-ring	MEMBRANE	O-ring
550 /cSt	OIL	500 /cSt

PISTONS

☐ 6 HOLES	1.1 mm	☐ 6 HOLES
☒ 8 HOLES	☒ 1.2 mm	☐ 8 HOLES
☐ 10 HOLES	☐ 1.3 mm	☒ 10 HOLES
	☐ 1.4 mm	
	OTHER	

VALVE PISTONS

5+2 HOLES	1.5 mm	5+2 HOLES
6+2 HOLES	1.3 mm	6+2 HOLES
	1.4 mm	
8+2 HOLES	1.2 mm	8+2 HOLES
	1.3 mm	

ANTI-ROLL BAR

FRONT	THICKNESS	REAR
2,2 /mm		2,5 /mm

TIRES

FRONT		REAR
Matrix	BRAND	Matrix
Hard	COMPOUND	Hard
Red	INSERTS	Red
Matrix	WHEELS	Hard

ELECTRONICS

MOTOR	
SPEEDO	
BATTERY TYPE	

☐ STANDARD BATTERY ☒ SHORT BATTERY — FRONT

☐ STANDARD BATTERY ☐ SHORT BATTERY — REAR
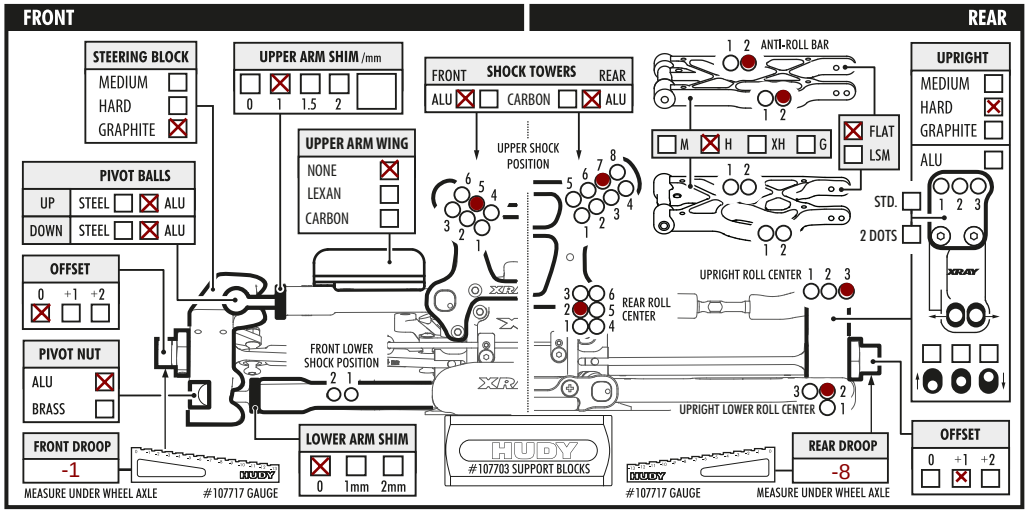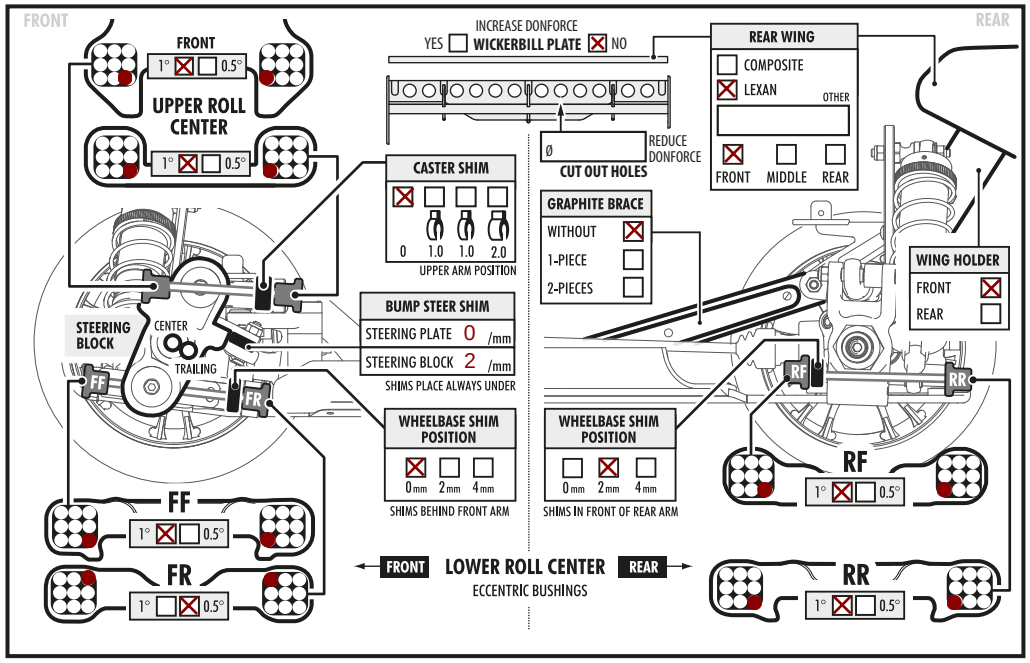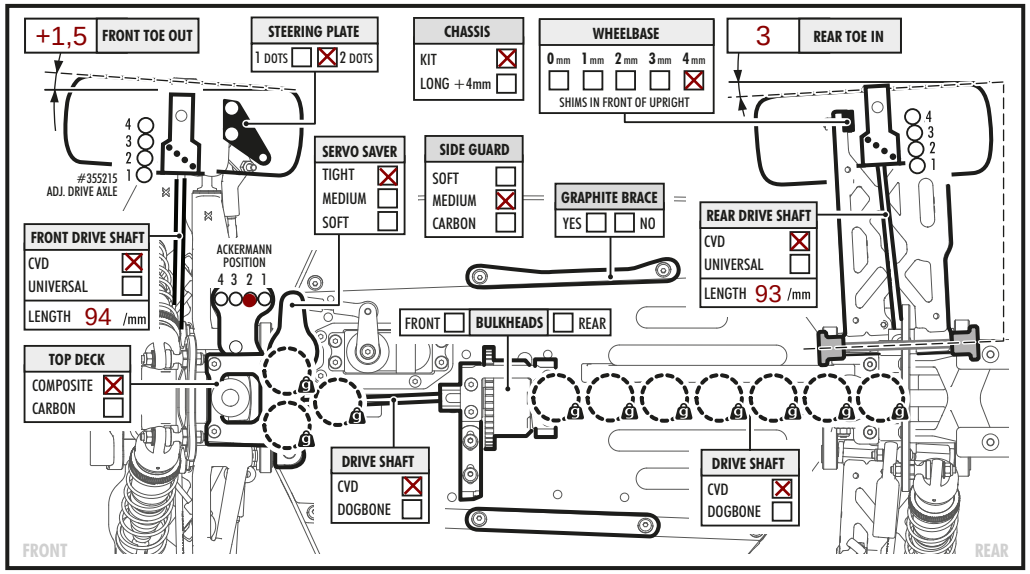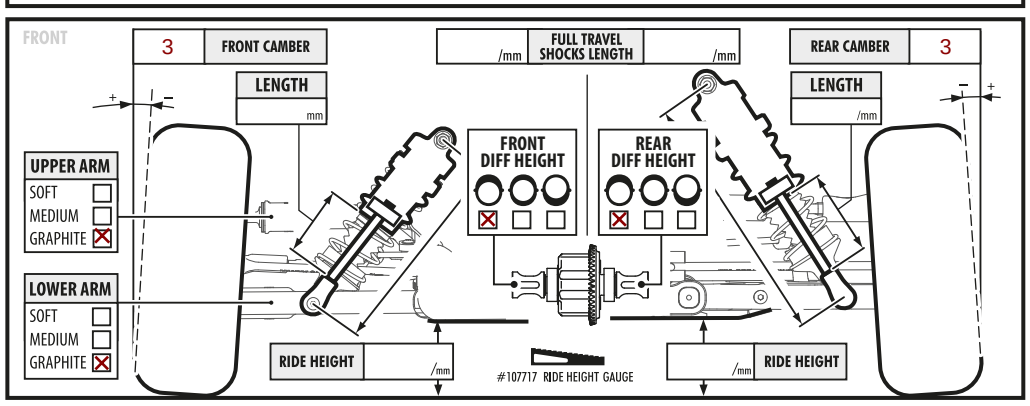
BODY	OTHER	TOTAL WEIGHT
☐ EAZY ☒ EAZY LIGHT		/g