SET-UP SHEET

XRAY XB8'23 SET-UP VER.01 ©XRAY

XRAY XB8'23 PIVOT BALL

RACE	Saturday Club Race
TRACK	Indy RC World
NAME	Garrett Martin
DATE	2/24/2024

TEMPERATURE AIR	TEMPERATURE TRACK	LAPS	FINAL POSITION	BEST LAPTIME	RACE LENGTH
75	60	40	1	22.8 /sec	16 /min

TRACKS

SIZE	☐ OPEN	☐ MEDIUM	☒ TIGHT
TRACTION	☐ LOW	☒ MEDIUM	☐ HIGH
SURFACE	☒ SMOOTH	☐ MEDIUM	☐ BUMPY
TYPE	☒ HARD PACKED	☐ SOFT DIRT	☐ CLAY
	☐ BLUE GROVE	☐ ASTRO TURF	☐ GRASS
CONDITION	☒ DRY	☐ DUSTY	☐ WET ☐ MUD

DIFFERENTIAL

	FRONT	CENTER	REAR	
CASE MATERIAL	graphite	graphite	graphite	CASE MATERIAL
OIL	7000	15000	3000	OIL
CROWN GEAR	13/46		13/46	CROWN GEAR

GEARING

CLUTCH SHOE	3 ☐ ☒ 4 — 2 carbon 2 alu
SPRINGS	4 1.0
CLUTCH BELL	14 /T
SPUR GEAR	48 /T

SHOCKS

FRONT		REAR
emulsion	TYPE	emulsion
4 dot	SPRINGS	3 dot
cut	MEMBRANE	cut
500 /cSt	OIL	450 /cSt

STANDARD PISTONS

☐ 6 HOLES	☐ 1.1 mm	☐ 6 HOLES	☐
☒ 8 HOLES	☒ 1.2 mm	☐ 8 HOLES	☒
☐ 10 HOLES	☐ 1.3 mm	☒ 10 HOLES	☐
	☐ 1.4 mm		
	OTHER		

VALVE PISTONS

5+2 HOLES ☐	1.5 mm ☐	☐ 5+2 HOLES
6+2 HOLES ☐	1.3 mm ☐	☐ 6+2 HOLES
	1.4 mm ☐	
8+2 HOLES ☐	1.2 mm ☐	☐ 8+2 HOLES
	1.3 mm ☐	

ANTI-ROLL BAR

FRONT	THICKNESS	REAR
2.2 /mm		2.4 /mm

TIRES

FRONT		REAR
Double Down	BRAND	Double Down
SLW	COMPOUND	SLW
AKA Punched	INSERTS	AKA Punched
AKA	WHEELS	AKA

ENGINE

TYPE	Reds 721 Gen4
MUFFLER	2143
MANIFOLD	X-One
PLUG	TS3
FUEL	JTP

BODY

EAZY ☒ EAZY LIGHT ☐ OTHER

TOTAL WEIGHT
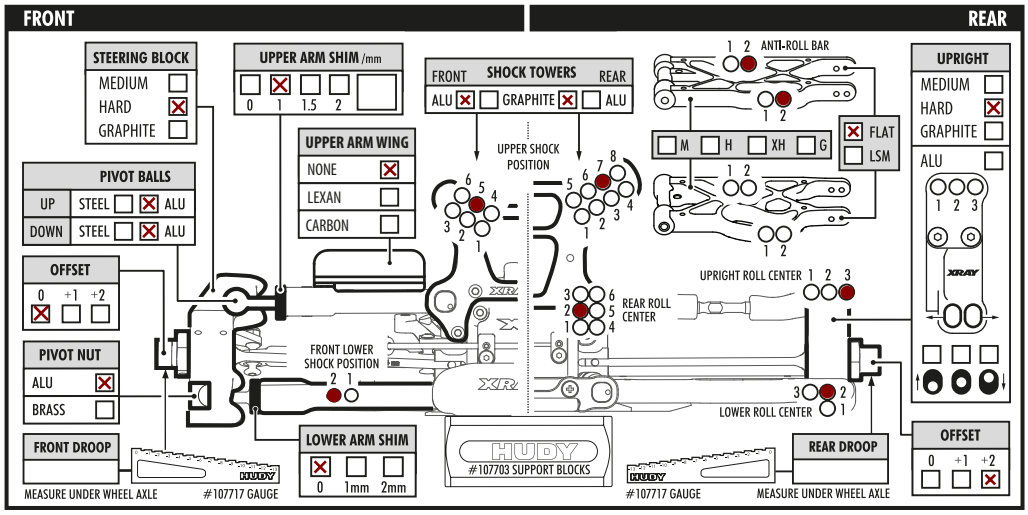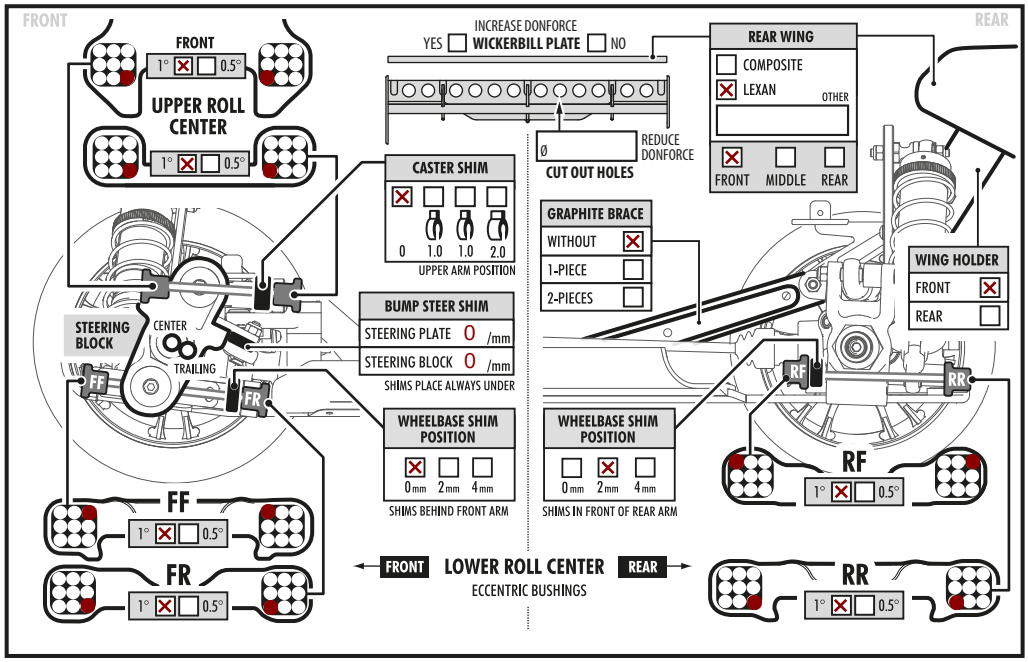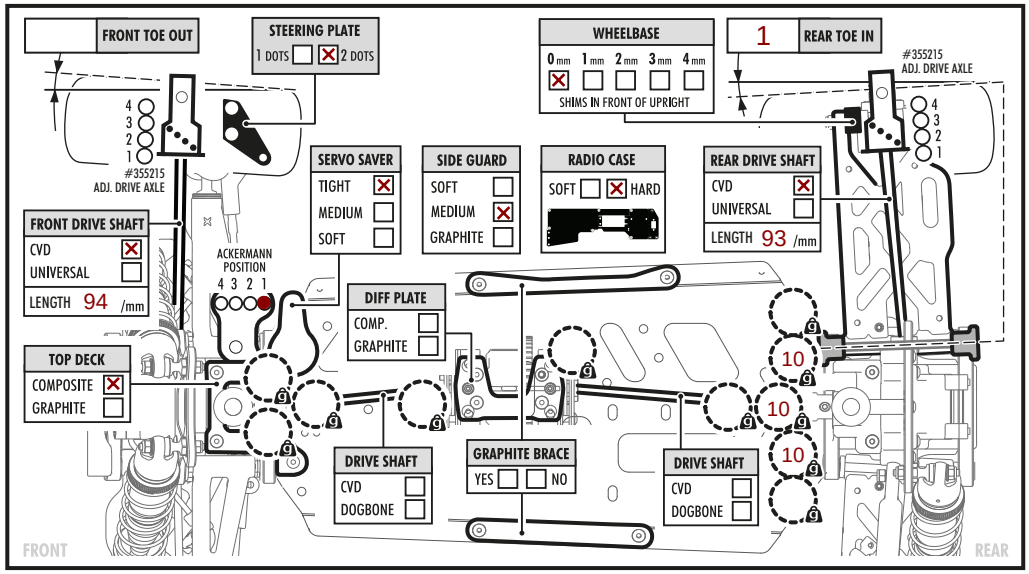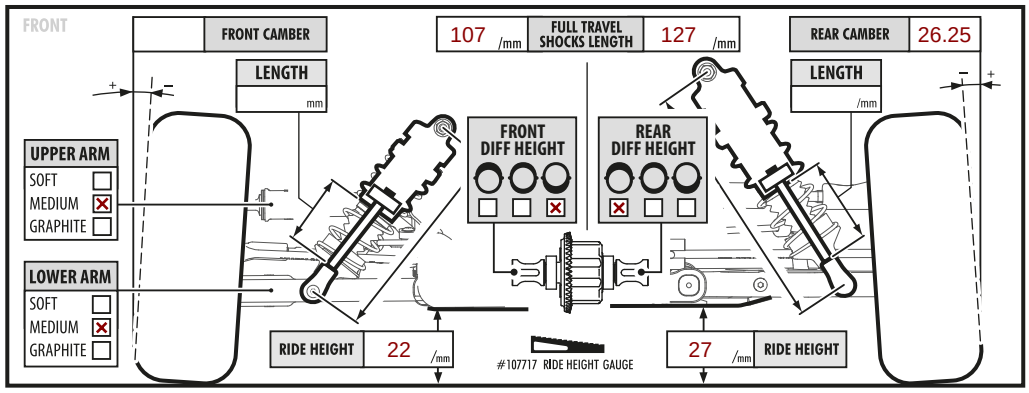
/g