SET-UP SHEET

XRAY XB8'23 SET-UP VER.01 ©XRAY

XRAY XB8'23 PIVOT BALL

RACE	EmiGrandi
TRACK	OBR Racing OffRoad
NAME	Giuseppe Tescione
DATE	

TEMPERATURE AIR		TEMPERATURE TRACK	04-06-2023
LAPS	FINAL POSITION	BEST LAPTIME	RACE LENGTH
	1st	/sec	/min

TRACKS

SIZE	☐ OPEN	☒ MEDIUM	☐ TIGHT
TRACTION	☐ LOW	☒ MEDIUM	☐ HIGH
SURFACE	☒ SMOOTH	☐ MEDIUM	☐ BUMPY
TYPE	☒ HARD PACKED	☐ SOFT DIRT	☐ CLAY
	☐ BLUE GROVE	☐ ASTRO TURF	☐ GRASS
CONDITION	☒ DRY	☐ DUSTY	☐ WET ☐ MUD

DIFFERENTIAL

	FRONT	CENTER	REAR	
CASE MATERIAL	kit	kit	kit	CASE MATERIAL
OIL	12k	15k	4k	OIL
CROWN GEAR	46		46	CROWN GEAR

GEARING

CLUTCH SHOE	3 ☒ ☐ 4 — 3x hard
SPRINGS	3x soft
CLUTCH BELL	14 /T
SPUR GEAR	47 /T

SHOCKS

FRONT		REAR
kit	TYPE	kit
4 dots	SPRINGS	3 dots
cell soft	MEMBRANE	cell soft
550 /cSt	OIL	550 /cSt

STANDARD PISTONS

☒ 6 HOLES	☐	1.1 mm	☐	6 HOLES ☒
☐ 8 HOLES	☐	1.2 mm	☐	8 HOLES ☐
☐ 10 HOLES	☒	1.3 mm	☒	10 HOLES ☐
	☐	1.4 mm	☐	
		OTHER		

VALVE PISTONS

5+2 HOLES	☐	1.5 mm	☐	5+2 HOLES
6+2 HOLES	☐	1.3 mm	☐	6+2 HOLES
	☐	1.4 mm		
8+2 HOLES	☐	1.2 mm	☐	8+2 HOLES
	☐	1.3 mm	☐	

ANTI-ROLL BAR

FRONT	THICKNESS	REAR
2.3 /mm		2.6 /mm

TIRES

FRONT		REAR
HotRace Vesuvio	BRAND	HotRace Vesuvio
Soft	COMPOUND	Soft
HotRace STD	INSERTS	HotRace STD
HotRace STD	WHEELS	HotRace STD

ENGINE

TYPE	MaxPower Storm
MUFFLER	
MANIFOLD	
PLUG	P4
FUEL	WinnerWorld 16%

BODY

EAZY ☒ EAZY LIGHT ☐ OTHER

TOTAL WEIGHT
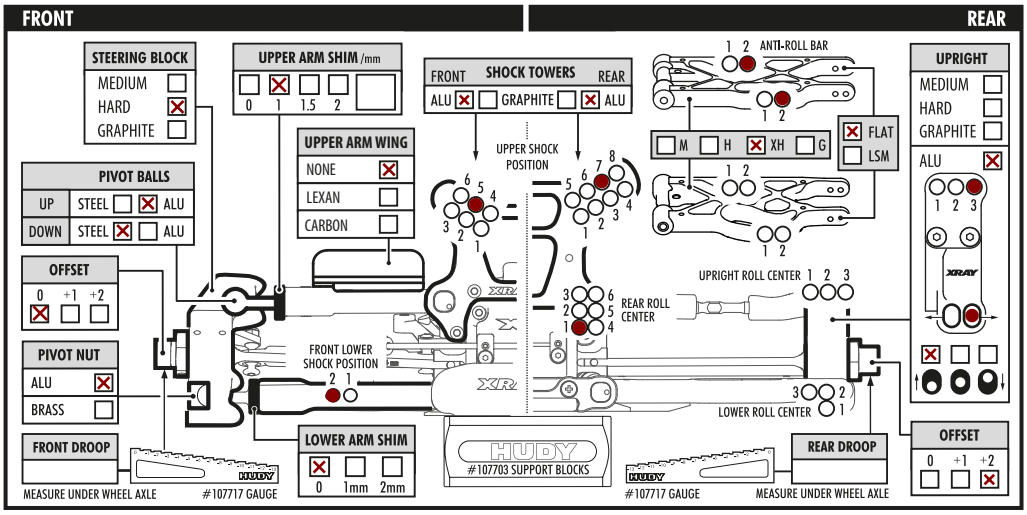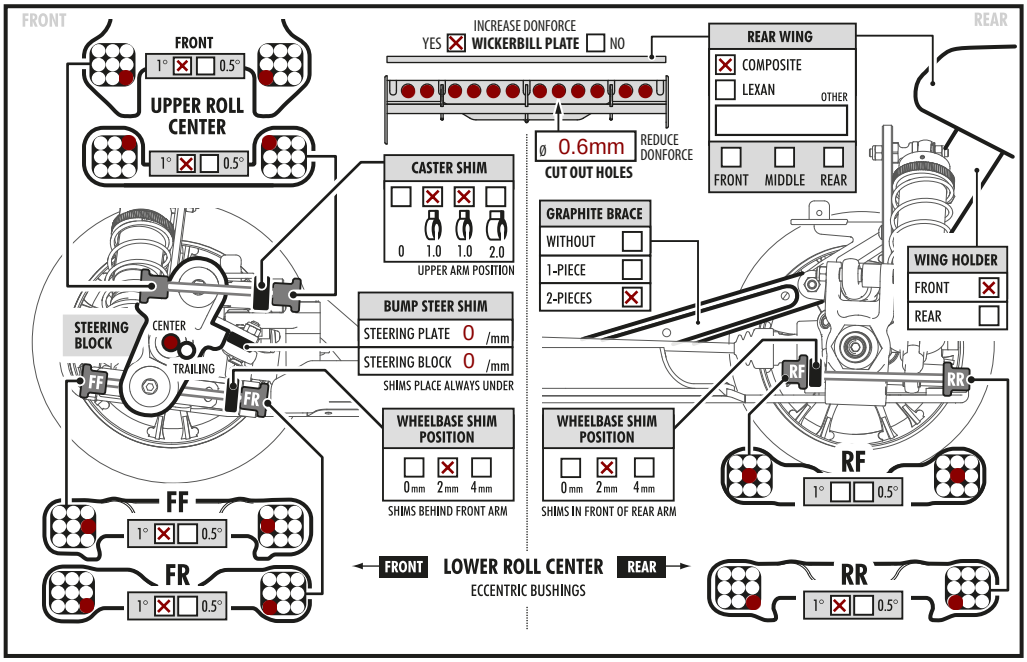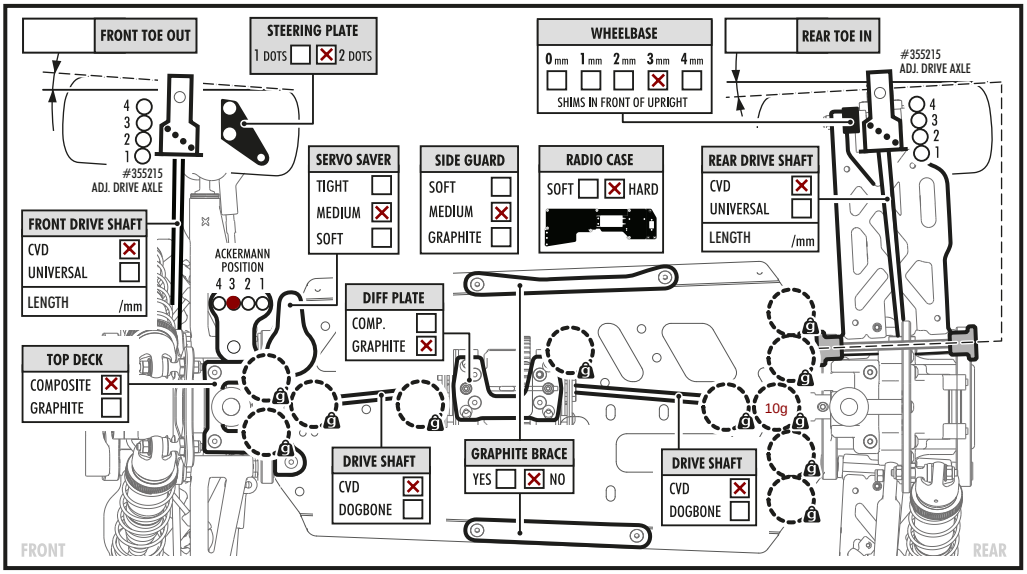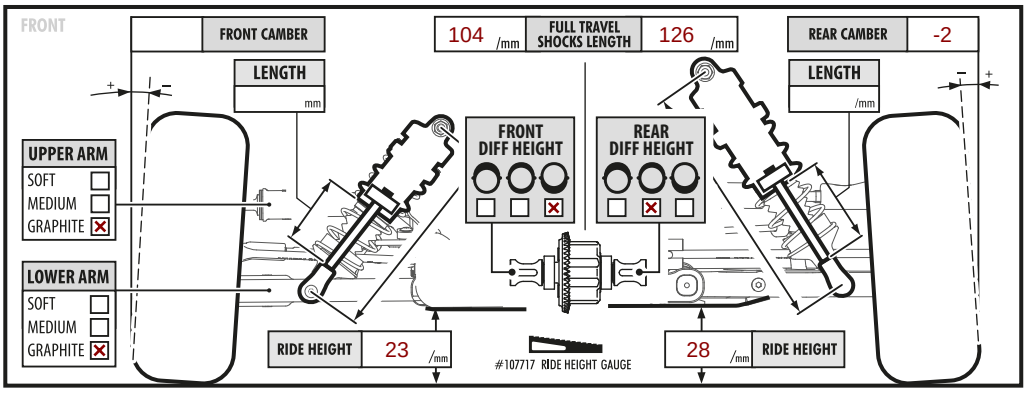
/g