SET-UP SHEET

XRAY XB8'23 SET-UP VER.01 ©XRAY

XRAY XB8'23 PIVOT BALL

RACE	Portuguese Nats Rd2
TRACK	Vilela
NAME	Monteiro
DATE	21/05/23

TEMPERATURE AIR		TEMPERATURE TRACK	
LAPS	FINAL POSITION	BEST LAPTIME	RACE LENGTH
		/sec	/min

TRACKS

SIZE	☐ OPEN	☒ MEDIUM	☐ TIGHT
TRACTION	☒ LOW	☐ MEDIUM	☐ HIGH
SURFACE	☐ SMOOTH	☒ MEDIUM	☐ BUMPY
TYPE	☒ HARD PACKED ☐ BLUE GROVE	☒ SOFT DIRT ☐ ASTRO TURF	☐ CLAY ☐ GRASS
CONDITION	☒ DRY	☐ DUSTY	☐ WET ☐ MUD

DIFFERENTIAL

	FRONT	CENTER	REAR	
CASE MATERIAL	Std	Std	Std	CASE MATERIAL
OIL	10k	7k	5k	OIL
CROWN GEAR	46		46	CROWN GEAR

GEARING

CLUTCH SHOE	3 ☐ ☒ 4	Medium
SPRINGS		Soft
CLUTCH BELL	13 /T	SPUR GEAR 47 /T

SHOCKS

FRONT		REAR
Emulsion	TYPE	Emulsion
5	SPRINGS	4
	MEMBRANE	
425 /cSt	OIL	450 /cSt

STANDARD PISTONS

☒ 6 HOLES	☐ 1.1 mm	☐ 6 HOLES ☒
☐ 8 HOLES	☒ 1.2 mm	☐ 8 HOLES ☐
☐ 10 HOLES	☐ 1.3 mm	☐ 10 HOLES ☐
	☐ 1.4 mm	
	OTHER	1.35

VALVE PISTONS

5+2 HOLES	1.5 mm	5+2 HOLES
6+2 HOLES	1.3 mm	6+2 HOLES
	1.4 mm	
8+2 HOLES	1.2 mm	8+2 HOLES
	1.3 mm	

ANTI-ROLL BAR

FRONT	THICKNESS	REAR
2.4 /mm		2.6 /mm

TIRES

FRONT		REAR
Hot Race	BRAND	Bangkok
Hot Race	COMPOUND	Super Soft
Hot Race	INSERTS	Hot Race
Hot Race	WHEELS	Hot Race

ENGINE

TYPE	FX K303
MUFFLER	FX 2169
MANIFOLD	FX Medium
PLUG	FX #3
FUEL	Shoot Fuel

BODY

EAZY ☐ EAZY LIGHT ☒ OTHER

TOTAL WEIGHT
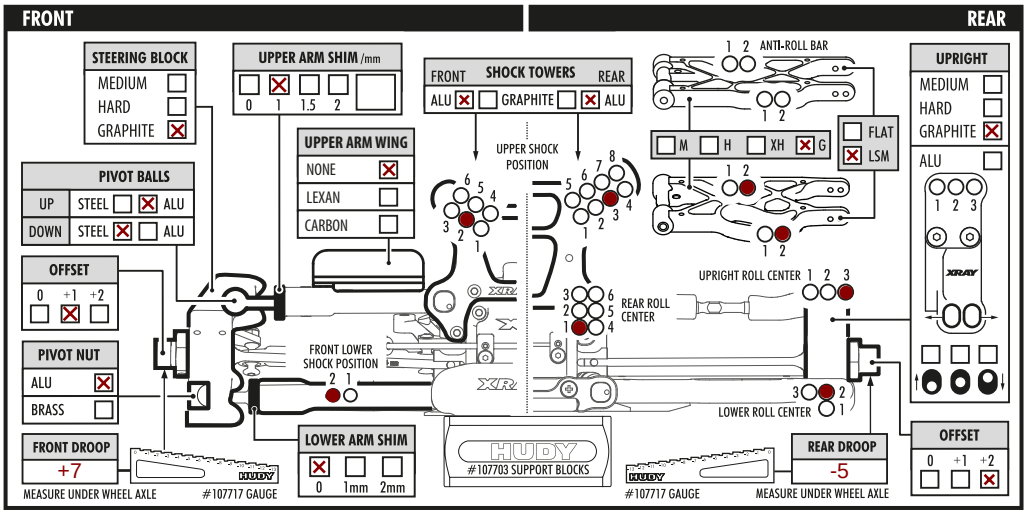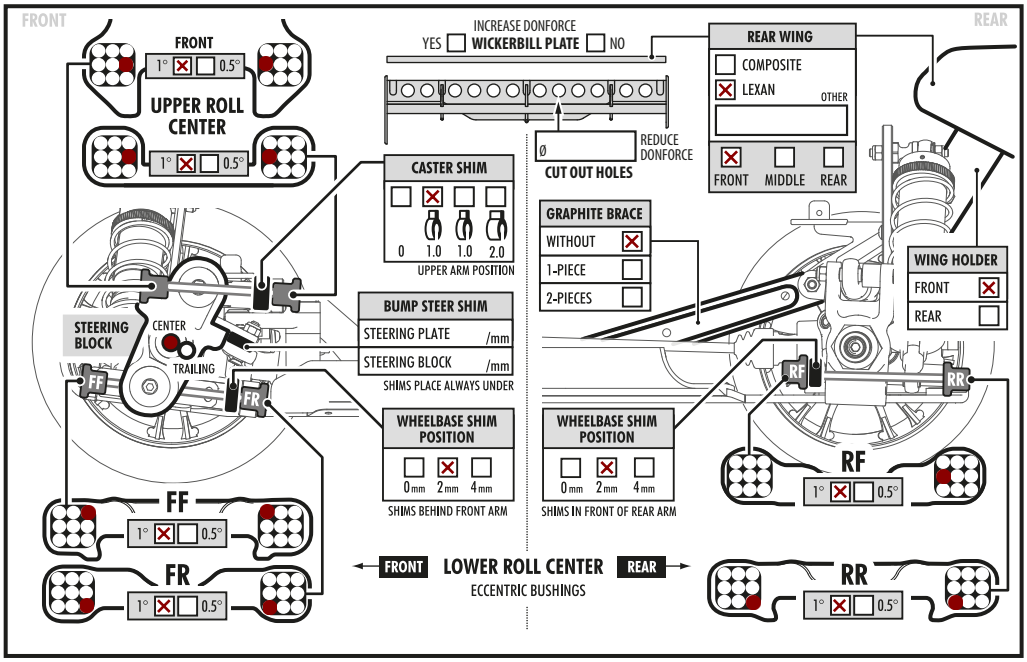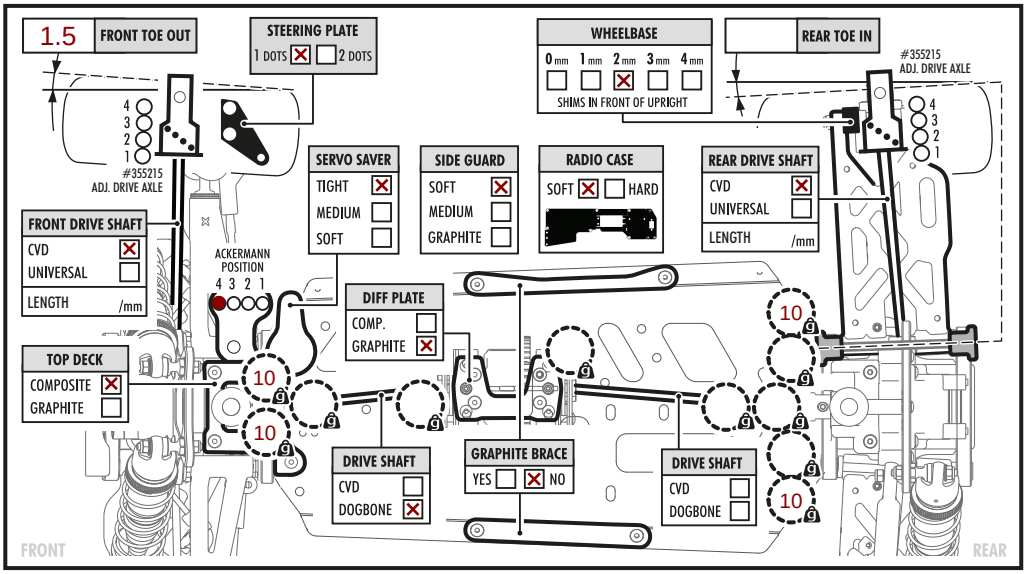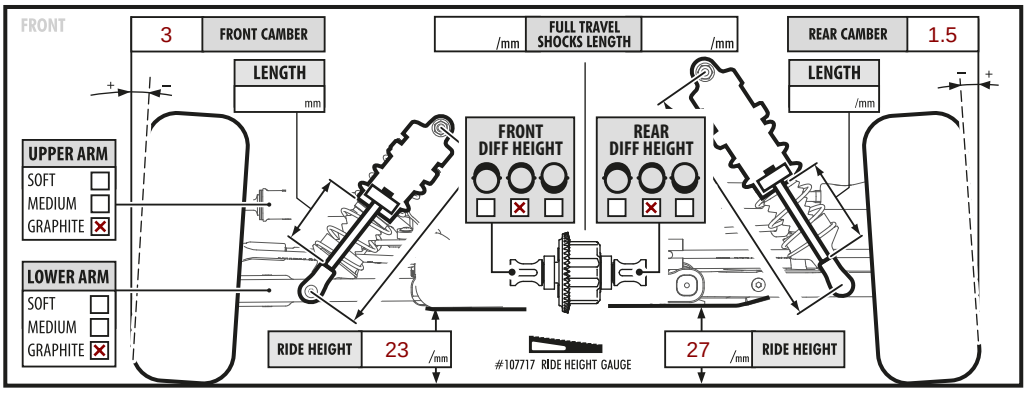
/g