SET-UP SHEET

X1'23 SET-UP SHEET VER.1 ©XRAY

XRAY X1'23

RACE	MRcup
TRACK	Brno
NAME	Lukas Hoch
DATE	july

QUAL POSITION	FINAL POSITION	BEST LAPTIME	LAPS	TIME
1	1	17.6 /sec	/	

TRACK

TRACK SURFACE	☐ CARPET	☒ ASPHALT	
TRACK LAYOUT	☐ TECHNICAL	☒ MIXED	☐ FAST
TRACTION	☐ LOW	☒ MEDIUM	☐ HIGH

CENTER SHOCK ABSORBER

SPRING	OIL /cSt	REBOUND /%
2.3-2.6	600	0

PISTON	PISTON HOLES DIAMETER	FOAM INSERT
☐ 3 HOLES	☒ ø1.1mm	
☒ 4 HOLES	☐ ø1.2mm	YES ☐ ☒ NO
☐ PSS	☐ ø1.3mm	

DAMPING

☒ SIDE TUBE	OIL	15 /cSt
☐ SIDE SHOCK	OIL	/cSt

TIRES

FRONT		REAR
hudy	TIRES	hudy
hudy red	ADDITIVE	hudy red
12	ADDITIVE TIMING	12
FRONT LEFT / FRONT RIGHT	ADDITIVE TREATED AREA	REAR LEFT / REAR RIGHT

TRANSMISSION

BALL DIFF	SOLID AXLE	GEAR DIFF
☐	☐	☒
☐ LOOSE ☐ ☐ MEDIUM ☐ ☐ TIGHT		OIL 3k /cSt

GEARING

PINION /T	SPUR GEAR /T	FINAL DRIVE RATIO
29	84	2.896

ELECTRONICS

MOTOR	hw
SPEEDO	scorpion
SERVO	powerhd
BATTERIES	gensace

BODY

gonzo L lw

COMMENTS
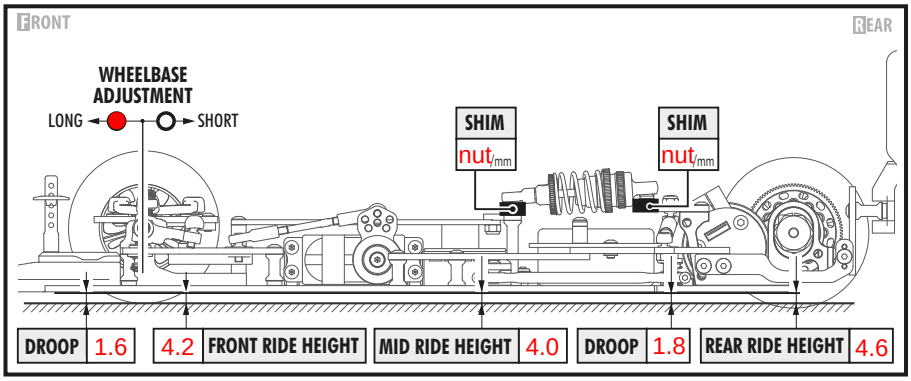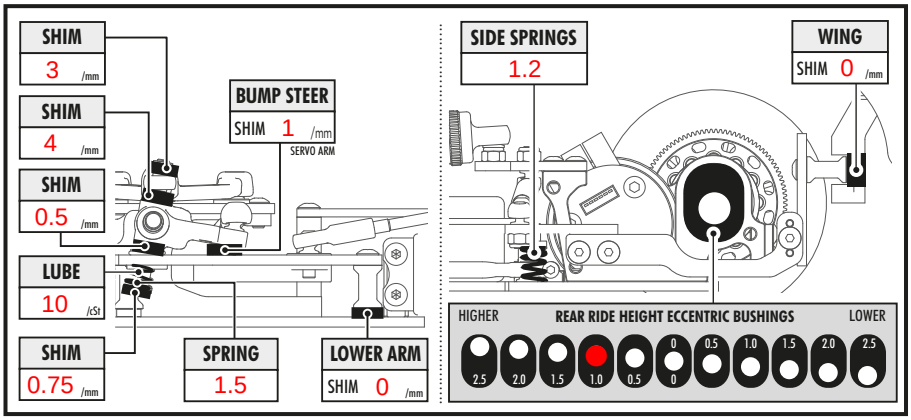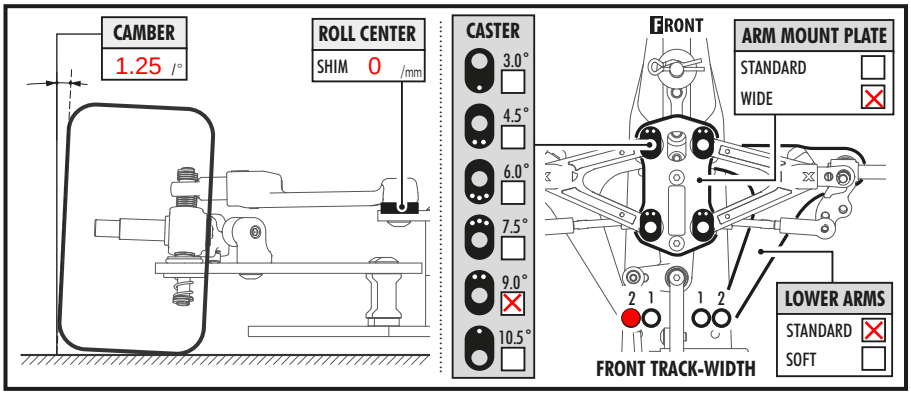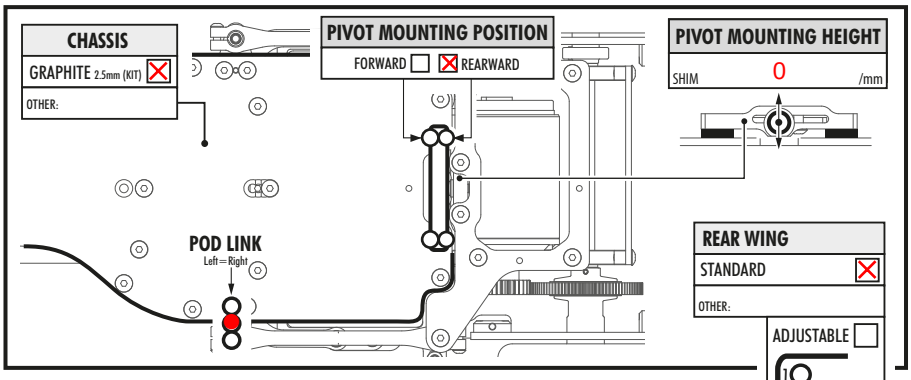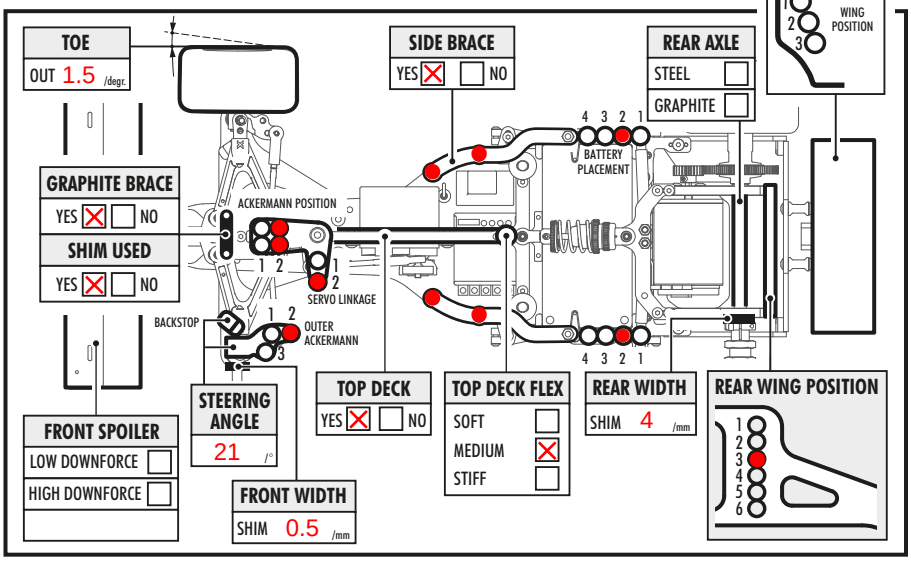
Front wing MT 2022 verdsion with no flaps.