SET-UP SHEET

SET-UP VER.01 ©XRAY

XRAY XB8E'22 PIVOT BALL

RACE	IBC 2022
TRACK	BBuggy Arena
NAME	Monteiro
DATE	01/05/2022

TEMPERATURE AIR		TEMPERATURE TRACK	

LAPS	FINAL POSITION	BEST LAPTIME	RACE LENGTH
		/sec	/min

TRACKS

SIZE	☐ OPEN	☒ MEDIUM	☐ TIGHT
TRACTION	☐ LOW	☐ MEDIUM	☒ HIGH
SURFACE	☒ SMOOTH	☐ MEDIUM	☐ BUMPY
TYPE	☒ HARD PACKED ☒ BLUE GROVE	☐ SOFT DIRT ☐ ASTRO TURF	☐ CLAY ☐ GRASS
CONDITION	☒ DRY	☐ DUSTY	☐ WET ☐ MUD

DIFFERENTIAL

	FRONT	CENTER	REAR	
CASE MATERIAL	std	g	std	CASE MATERIAL
OIL	20k	30k	10k	OIL
CROWN GEAR	46		46	CROWN GEAR

GEARING

MOTOR PINION	17 /T	46 /T	SPUR GEAR

SHOCKS

FRONT		REAR
zero rebound	TYPE	zero rebound
5 dot	SPRINGS	4 dot
clear	MEMBRANE	clear
450 /cSt	OIL	500 /cSt
☒ 6 HOLES	PISTONS 1.1 mm	☐ 6 HOLES ☒
☐ 8 HOLES	☒ 1.2 mm	☐ 8 HOLES ☐
☐ 10 HOLES	☐ 1.3 mm	☐ 10 HOLES ☐
	☐ 1.4 mm	
	OTHER	6x 1.35
	VALVE PISTONS	
5+2 HOLES	1.5 mm	5+2 HOLES
6+2 HOLES	1.3 mm	6+2 HOLES
	1.4 mm	
8+2 HOLES	1.2 mm	8+2 HOLES
	1.3 mm	

ANTI-ROLL BAR

FRONT	THICKNESS	REAR
2.4 /mm		2.6 /mm

TIRES

FRONT		REAR
Hot Race	BRAND	Hot Race
Bangkok/Sahara	COMPOUND	Soft
Hot Race	INSERTS	Hot Race
Hot Race	WHEELS	Hot Race

ELECTRONICS

MOTOR	1900kv
SPEEDO	
BATTERY TYPE	XTR 6300 Shorty

SADDLE PACK ☒ ☐ BRICK PLATE

☐ STANDARD BATT. FR RR ☒ SHORT BATT.

BATT ESC FR RR ESC BATT

SHORT ☐ ☐ STANDARD

BODY

EAZY ☒ EAZY LIGHT ☐ OTHER

TOTAL WEIGHT
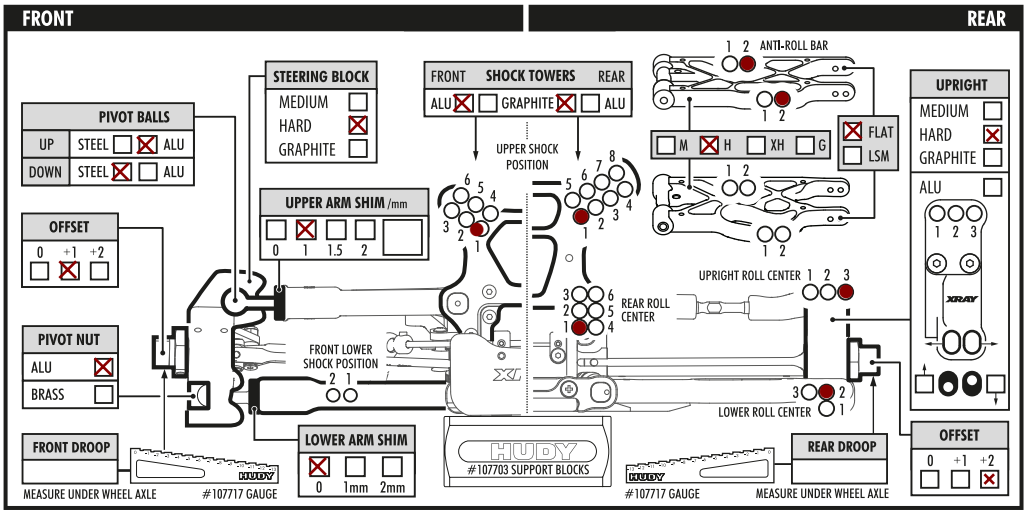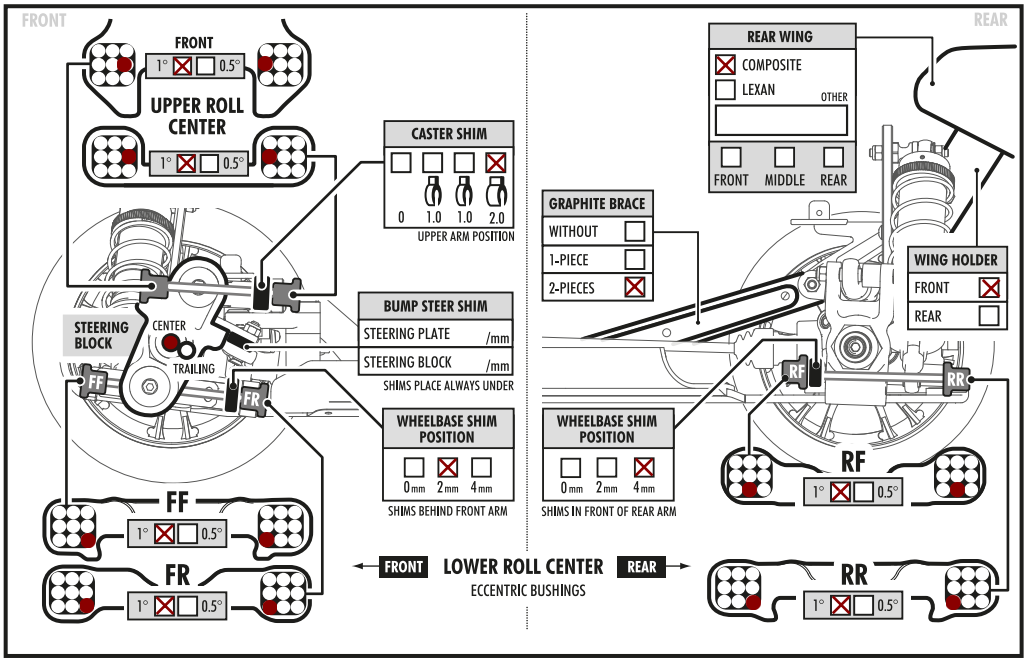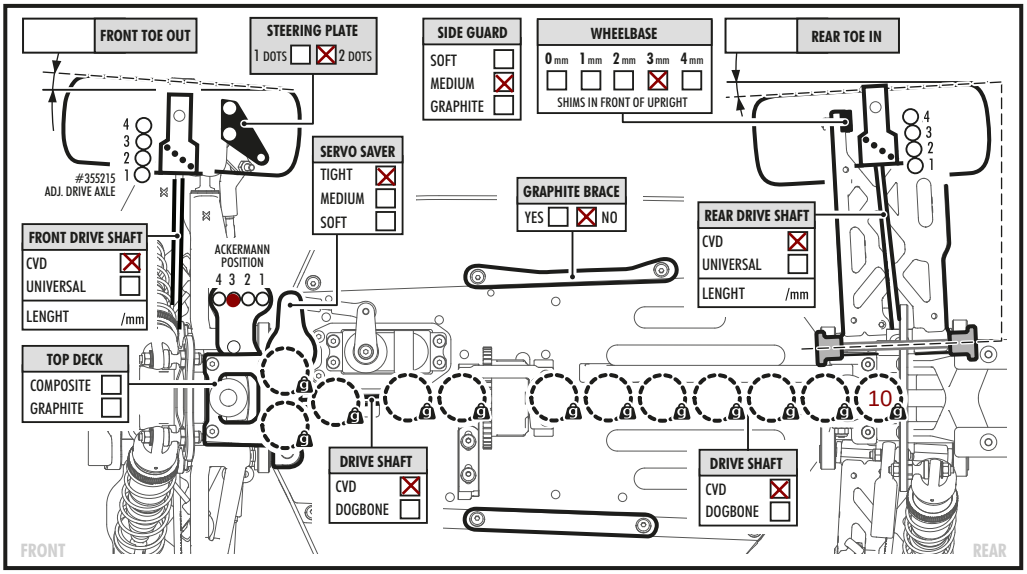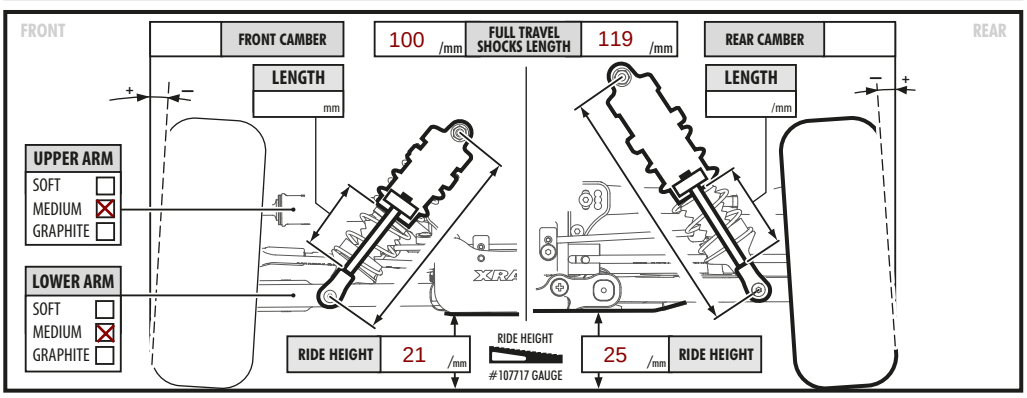
/g